3W isolated DC-DC converter
Wide input & regulated single/dual output

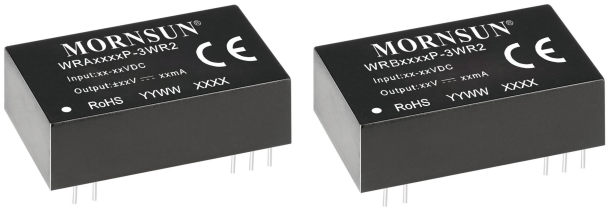

Patent Protection

CE Report EN62368-1 UKCA Report BS EN62368-1 RoHS

FEATURES

- Wide input voltage range (2:1)
- High efficiency up to 86%
- I/O isolation test voltage 1.5k VDC
- Output short-circuit protection (self-recovery)
- Operating ambient temperature range: -40℃ to +85℃
- Meet CISPR32/EN55032 CLASS A, without extra components

WRA_P-3WR2 & WRB_P-3WR2 series of isolated 3W DC-DC products with 2:1 input voltage and conventional voltage output. The product has a relatively compact DIP package, and features high efficiency, operating temperature of -40℃ to +85℃, remote control, and continuous short-circuit protection. The smaller size and cost-effective design make the converter an ideal solution in communication, instruments, and industrial electronics applications.

Selection Guide

Certification	Part No.	Input Voltage (VDC)		Output		Full Load Efficiency (%)Min./Typ.	Capacitive Load② (μF)Max.
		Nominal (Range)	Max.①	Voltage (VDC)	Current (mA) Max./Min.		
EN/BS EN	WRA0505P-3WR2	5 (4.5-9)	11	±5	±300/±15	74/76	2200
	WRA0512P-3WR2			±12	±125/±6	76/78	1800
	WRA0515P-3WR2			±15	±100/±5	76/78	1000
	WRB0505P-3WR2			5	600/30	72/74	4700
	WRA1205P-3WR2	12 (9-18)	20	±5	±300/±15	79/81	2200
	WRA1209P-3WR2			±9	±166/±8	82/84	2000
	WRA1212P-3WR2			±12	±125/±6	82/84	1800
	WRA1215P-3WR2			±15	±100/±5	83/85	1000
EN/BS EN	WRB1205P-3WR2			5	600/30	79/81	4700
EN/BS EN	WRA2405P-3WR2	24 (18-36)	40	±5	±300/±15	80/82	2200
	WRA2412P-3WR2			±12	±125/±6	82/84	1800
	WRA2415P-3WR2			±15	±100/±5	82/84	1000
	WRB2403P-3WR2			3.3	909/46	76/78	4700
	WRB2405P-3WR2			5	600/30	79/81	4700
EN/BS EN	WRB2412P-3WR2			12	250/12	84/86	2700
--	WRB2415P-3WR2			15	200/10	84/86	2200
EN/BS EN	WRB2424P-3WR2			24	125/6	83/85	1800
--	WRB4805P-3WR2	48 (36-75)	80	5	600/30	80/82	4700
	WRB4812P-3WR2			12	250/12	84/86	2700

Note: ①Exceeding the maximum input voltage may cause permanent damage;
②The specified maximum capacitive load for positive and negative output is identical.

Input Specifications

Item	Operating Conditions	Min.	Typ.	Max.	Unit
Input Current (full load /no-load)	5VDC input	--	789/40	834/--	mA
	12VDC input	--	316/30	348/35	
	24VDC input	--	152/15	165/20	
	48VDC input	--	77/5	85/10	

MORNSUN Guangzhou Science & Technology Co., Ltd. reserves the copyright and right of final interpretation

Reflected Ripple Current	5VDC input	--	20	--	mA
	12VDC input	--	30	--	
	24VDC input	--	30	--	
	48VDC input	--	30	--	
Surge Voltage (1sec. max.)	5VDC input	-0.7	--	12	VDC
	12VDC input	-0.7	--	25	
	24VDC input	-0.7	--	50	
	48VDC input	-0.7	--	100	
Start-up Voltage	5VDC input	--	--	4.5	
	12VDC input	--	--	9	
	24VDC input	--	--	18	
	48VDC input	--	--	36	
Input Filter		Pi filter			
Hot Plug		Unavailable			

Output Specifications

Item	Operating Conditions		Min.	Typ.	Max.	Unit
Voltage Accuracy	5%-100% load		--	±1	±3	%
No-load Output Voltage Accuracy	Input voltage range		--	±1.5	±5	
Balance Of Output Voltage	Dual output, balanced load		--	±0.5	±1	
Linear Regulation	Input voltage variation from low to high at full load		--	±0.2	±0.5	
Load Regulation	5%-100% load		--	±0.2	±0.5	
Transient Recovery Time	25% load step change		--	0.5	2	ms
Transient Response Deviation			--	±2	±5	%
Temperature Coefficient	Full load		--	±0.02	±0.03	%/℃
Ripple & Noise*	20MHz bandwidth, nominal input voltage	24VDC output	--	100	120	mVp-p
		Others	--	50	80	
Short-circuit Protection	Input voltage range		Continuous, self-recovery			

Note: *The "parallel cable" method is used for Ripple and Noise test, please refer to DC-DC Converter Application Notes for specific information.

General Specifications

Item	Operating Conditions	Min.	Typ.	Max.	Unit
Isolation	Input-output Electric Strength Test for 1 minute with a leakage current of 1mA max.	1500	--	--	VDC
Insulation Resistance	Input-output resistance at 500VDC	1000	--	--	MΩ
Isolation Capacitance	Input-output capacitance at 100kHz/0.1V	--	120	--	pF
Operating Temperature	Derating when operating temperature up to 85℃ (see Fig. 1)	-40	--	85	℃
Storage Temperature		-55	--	125	
Case Temperature Rise	Ta=25℃	--	25	--	
Pin Soldering Resistance Temperature*	Soldering spot is 1.5mm away from case for 10 seconds	--	--	300	
	Wave soldering,10 seconds	255	260	265	
Storage Humidity	Non-condensing	--	--	95	%RH
Switching Frequency(PFM mode)	100% load, nominal input voltage	--	200	--	kHz
MTBF	MIL-HDBK-217F@25℃	1000	--	--	k hours

Note:*The pin resistance temperature is not the actual set temperature of the soldering iron, but the temperature required for a good solder joint. The actual set temperature by the customer needs to be comprehensively set based on the thickness of the PCB, the size of the copper cladding, the power of the soldering iron, and the selection of the soldering iron tip.

MORNSUN Guangzhou Science & Technology Co., Ltd. reserves the copyright and right of final interpretation

Mechanical Specifications

Case Material	Black plastic; flame-retardant and heat-resistant (UL94-V0)
Dimensions	31.60 x 20.30 x 10.20 mm
Weight	14g (Typ.)
Cooling Method	Free air convection

Electromagnetic Compatibility (EMC)

EMI	CE	CISPR32/EN55032	CLASS A(Bare component)/CLASS B (see Fig.3-② for recommended circuit)	
	RE	CISPR32/EN55032	CLASS A(Bare component)/CLASS B (see Fig.3-② for recommended circuit)	
EMS	ESD	IEC/EN61000-4-2	Contact ±4kV	perf. Criteria B
	RS	IEC/EN61000-4-3	10V/m	perf. Criteria A
	EFT	IEC/EN61000-4-4	±2kV (see Fig.3-① for recommended circuit)	perf. Criteria B
	Surge	IEC/EN61000-4-5	line to line ±2kV (see Fig.3-①for recommended circuit)	perf. Criteria B
	CS	IEC/EN61000-4-6	3 Vr.m.s	perf. Criteria A
	Voltage dips, short interruptions and voltage variations immunity	IEC/EN61000-4-29	0%, 70%	perf. Criteria B

Typical Characteristic Curves

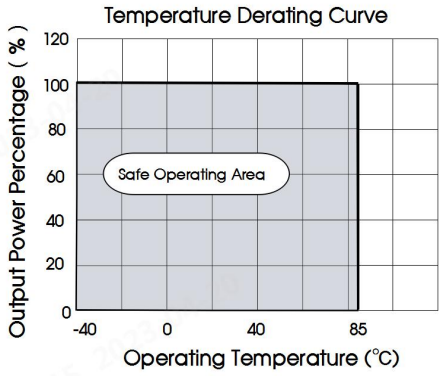

Fig. 1

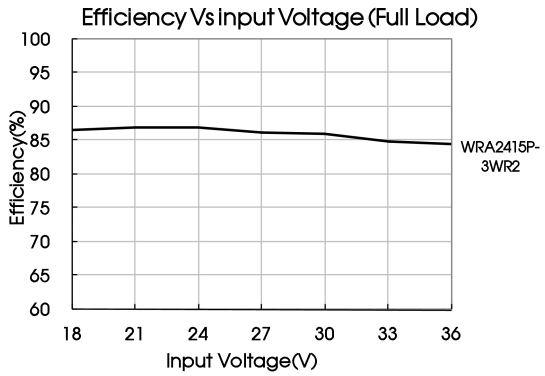

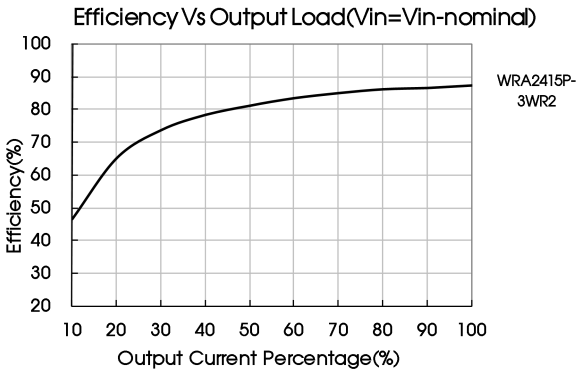

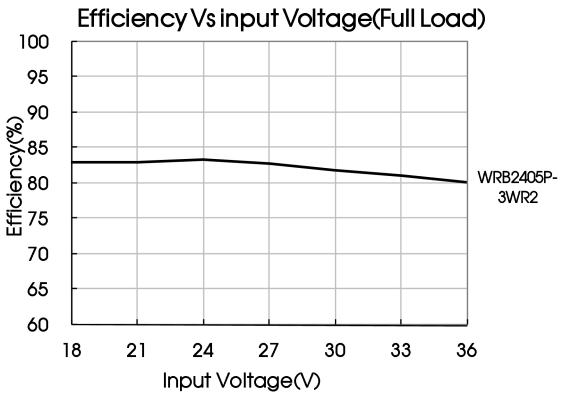

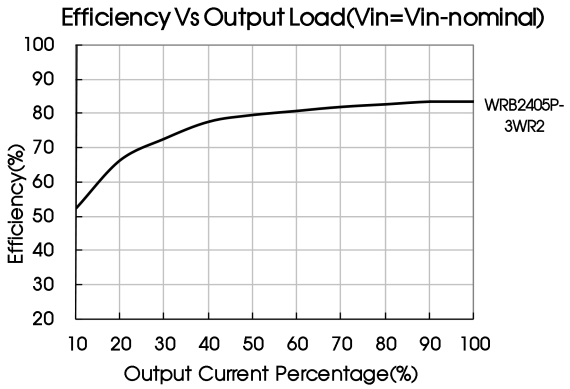

MORNSUN Guangzhou Science & Technology Co., Ltd. reserves the copyright and right of final interpretation

Design Reference

1. Output load requirements

In order to ensure the converter can work reliably with high efficiency, the minimum load should not less than 5% rated load when it is used, or the output ripple may increase rapidly. Ensure that the product working load must be higher than 5% of the rated load.

2. Typical application

All DC-DC converters of this series are tested before delivery using the recommended circuit shown in Fig. 2.

Input and/or output ripple can be further reduced by appropriately increasing the input & output capacitor values Cin and Cout and/or by selecting capacitors with a low ESR (equivalent series resistance). Also make sure that the capacitance is not exceeding the specified max. capacitive load value of the product.

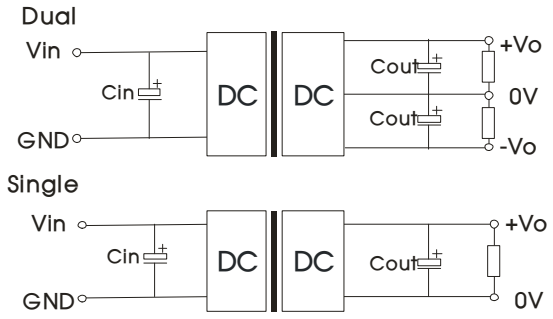

Fig. 2

Vin	Cin	Vo(VDC)	Cout
5VDC	10μF/16V	±5/5	10μF/16V
		±12/±15	10μF/25V
12VDC	100μF/25V	±5/±9/5	10μF/16V
		±12/±15	10μF/25V
24VDC	10μF/50V~ 47μF/50V	±5/3.3/5	10μF/16V
		±12/±15/12/15	10μF/25V
		24	10μF/50V
48VDC	10μF/100V~ 47μF/100V	5	10μF/16V
		12	10μF/25V

3. EMC compliance circuit

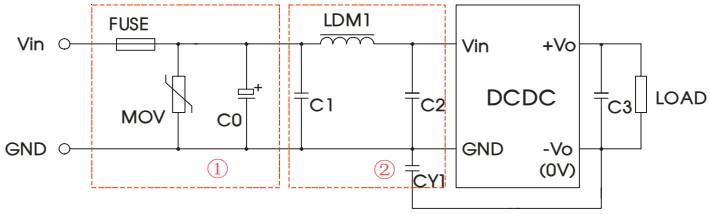

Fig. 3

Parameter description:

Model	Vin: 5VDC	Vin:12VDC	Vin: 24VDC	Vin: 48VDC
FUSE	Choose according to actual input current			
MOV	--	S14K20	S20K30	S14K60
C0	1000μF/16V	1000μF/25V	330μF/50V	330μF/100V
C1	4.7μF/50V			4.7μF/100V
LDM1	12μH			
C2	4.7μF/50V			4.7μF /100V
C3	10μF			
CY1	1nF/2kV			

Note: ①For EMC tests we use Part ① in the Fig. 3 is used for immunity and part ② for emissions test. Selecting based on needs.
②If there is no recommended parameters, the model no require the external component.

4. Input current

When the electricity is provided by the unstable power supply, please make sure that the range of the output voltage fluctuation and the ripple voltage of the power supply do not exceed the indicators of the modules. Input current of power supply should afford the flash startup current of this kind of DC/DC module(see Fig. 4).

Generally: Vin=5V Iave =1297mA
Vin=12V Iave=649mA
Vin=24V Iave=307mA
Vin=48V Iave =158mA

MORNSUN Guangzhou Science & Technology Co., Ltd. reserves the copyright and right of final interpretation

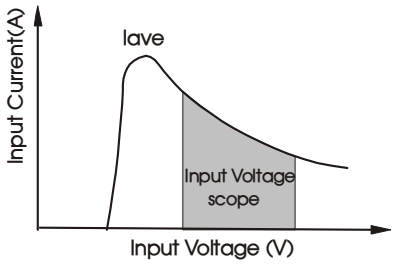

Fig. 4

5. For additional information please refer to DC-DC converter application notes on www.mornsun-power.com

Dimensions and Recommended Layout

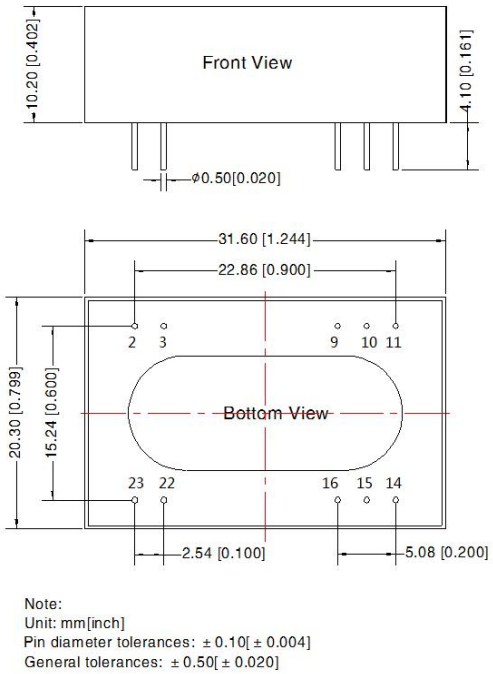

Note:
Unit: mm[inch]
Pin diameter tolerances: ± 0.10[± 0.004]
General tolerances: ± 0.50[± 0.020]

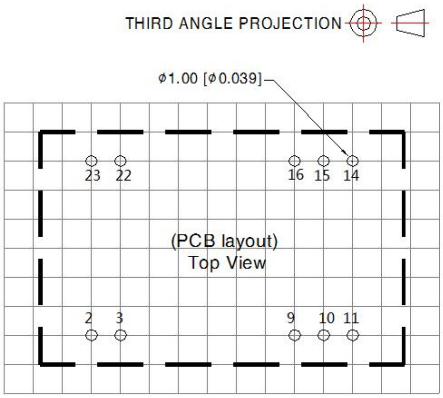

Note: Grid 2.54*2.54mm

Pin-Out		
Pin	Single	Dual
2,3	GND	GND
9	NC	0V
10,15	NC	NC
11	NC	-Vo
14	+Vo	+Vo
16	0V	0V
22,23	Vin	Vin

NC: Not available for electrical connection

Note:
1. For additional information on Product Packaging please refer to www.mornsun-power.com. Packaging bag number: 58210008;
2. Recommend to use module with more than 5% load, if not, the ripple of the product may exceeds the specification, but does not affect the reliability of the product;
3. The recommended unbalance degree of the dual output module load is ≤±5%; if the degree exceeds ≤±5%, than the product performance cannot be guaranteed to comply with all parameters in the datasheet. Please contact our technicians directly for specific information;
4. The maximum capacitive load offered were tested at input voltage range and full load;
5. Unless otherwise specified, parameters in this datasheet were measured under the conditions of Ta=25℃, humidity<75%RH with nominal input voltage and rated output load;
6. All index testing methods in this datasheet are based on company corporate standards;
7. The performance parameters of the product models listed in this manual are as above, but some parameters of non-standard model products may exceed the requirements mentioned above. Please contact our technicians directly for specific information;
8. We can provide product customization service;
9. Specifications-are subject to change without prior notice.

Mornsun Guangzhou Science & Technology Co., Ltd.
Address: No. 8 Nanyun 4th Road, Huangpu District, Guangzhou, China
Tel: 86-20-38601850 Fax: 86-20-38601272 E-mail: info@mornsun.cn www.mornsun-power.com

MORNSUN Guangzhou Science & Technology Co., Ltd. reserves the copyright and right of final interpretation