MORNSUN®

Dual high speed RS232 isolated transceiver





RoHS

FEATURES

- Products meet EIA/TIA-232-F standard
- High baud rate of up to 115200bps
- Isolation test voltage: 3000VDC
- Integrated isolated DC/DC converter
- Operating temperature range: -40℃ to +85℃
- Enhanced EMC performance with recommended external circuit

The TD302D232H/TD502D232H series of isolated dual high speed 232 transceivers are all-in-one modules with isolated power supply, isolated signal and RS232 transceiver chip integrated in one RS232 interface solution. The main products function is to switch from logic level to 232 protocols level and achieving signal isolation and the product features a constant-voltage source isolated power supply which withstands a test voltage of 3000VDC. The products also can easily be embedded in the user's end equipment, to achieve fully functional RS232 protocols network connections.

Selection Guide

Certification	Part No.	Power Input (VDC)	Baud Rate (bps)	Static Current (mA)	Maximum Operating Current (mA)
--	TD302D232H	3.15-3.45	115200	60	90
	TD502D232H	4.75-5.25	115200	35	80

Absolute Limits

Item	Operating Conditions	Min.	Typ.	Max.	Unit
Input Surge Voltage (1sec.max.)	3.3V series	-0.7	--	5	VDC
	5.0V series	-0.7	--	7	
Pin Soldering Temperature	Soldering spot 1.5mm away from case, 10s max.	--	--	300	℃

3.3V Input Specifications

Item		Symbol	Min.	Typ.	Max.	Unit
Power Supply Input Voltage		VCC	3.15	3.3	3.45	VDC
TXD Logic Level	High-level	V_{IH}	0.7Vcc	--	3.6	
	Low-level	V_{IL}	0	--	0.8	
RXD Logic Level	High-level	V_{OH}	VCC-0.4	3.1	--	
	Low-level	V_{OL}	0	0.2	0.4	
TXD Drive Current		I_T	2	--	--	mA
RXD Output Current		I_R	--	--	10	
Serial Interface		Compatible with + 3.3 V UART interface only				

5.0V Input Specifications

Item		Symbol	Min.	Typ.	Max.	Unit
Power Supply Input Voltage		VCC	4.75	5	5.25	VDC
TXD Logic Level	High-level	V_{IH}	0.7Vcc	--	5.5	
	Low-level	V_{IL}	0	--	0.8	
RXD Logic Level	High-level	V_{OH}	VCC-0.4	4.8	--	
	Low-level	V_{OL}	0	0.2	0.4	
TXD Drive Current		I_T	2	--	--	mA
RXD Output Current		I_R	--	--	10	
Serial Interface		Compatible with + 5 V UART interface only				

MORNSUN Guangzhou Science & Technology Co., Ltd. reserves the copyright and right of final interpretation

Transmission Specifications

Item		Symbol	Min.	Typ.	Max.	Unit
Data Delay	TXD Transmitter Delay	t_T	--	--	2	us
	RXD Receiver Delay	t_R	--	--	2	

Output Specifications

Item		Operating Conditions	Min.	Typ.	Max.	Unit
Driver Output Voltage	High-level	R_L=3kΩ to GND	5	--	--	VDC
	Low-level	R_L=3kΩ to GND	--	--	-5	
Receiver Input voltage			-15	--	15	
Bus Interface Protection			ESD protection			

Truth Table Specifications

Transceiver Control	Input	Output
Send Status	TXD	T_OUT
	L	H
	H	L
Receive Status①	R_IN	RXD
	≥2.4V	L
	≤0.8V	H
	0.8V≤RXD≤2.4V	Undefined state

Note: ①The receiving threshold voltage will vary slighty with Vcc.

General Specifications

Item	Operating Conditions	Value
Isolation Voltage	Electric strength test for 1 minute, leakage current <1mA	3000VDC
Insulation Resistance	At 500VDC	1000MΩ (Input-output)
Operating Temperature		-40℃ to +85℃
Transportation and Storage Temperature		-50℃ to +105℃
Operating Humidity	Non-condensing	10% - 90%
Safety Class		CLASS III

Mechanical Specifications

Case Material	WH8100-F
Dimensions	DIP12 (20.00 x 17.00 x 7.00mm)
Weight	4.0g(Typ.)
Cooling Method	Free air convection

Electromagnetic Compatibility (EMC)

Emissions	CE	CISPR32/EN55032 CLASS A (see Fig. 2-①)	
	RE	CISPR32/EN55032 CLASS A	
Immunity	ESD	IEC/EN 61000-4-2 Contact ±4kV	Perf. Criteria B
	RS	IEC/EN 61000-4-3 10V/m	Perf. Criteria A
	EFT	IEC/EN 61000-4-4 ±1kV (Signal port)	Perf. Criteria B
	Surge	IEC/EN 61000-4-5 ±4kV (line to line, Signal port, see Fig. 2-②)	Perf. Criteria B
		IEC/EN 61000-4-5 ±6kV (line to ground, Signal port, see Fig. 2-②)	Perf. Criteria B
	CS	IEC/EN 61000-4-6 3Vr.m.s	Perf. Criteria A

MORNSUN Guangzhou Science & Technology Co., Ltd. reserves the copyright and right of final interpretation

Application Precautions

1. Carefully read and follow the instructions before use; contact our technical support if you have any question;
2. Do not use the product in hazardous areas;
3. Use only DC power supply source for this product, 220VAC power supply is prohibited;
4. Hot-swap is not supported;
5. If the external input of TXD is insufficient, the pull-up resistor should be added according to the situation;
6. It is strictly forbidden to disassemble the product privately in order to avoid product failure or malfunction.

After-sales service

1. Factory inspection and quality control are strictly enforced before shipping any product; please contact your local representative or our technical support if you experience any abnormal operation or possible failure of the module;
2. The products have a 3-year warranty period, from the date of shipment. The product will be repaired or exchanged free of charge within the warranty period for any quality problem that occurs under normal use.

Applied circuit

See *Application Notes for Isolated Transmitter* for details.

Design Reference

1. Typical application circuit

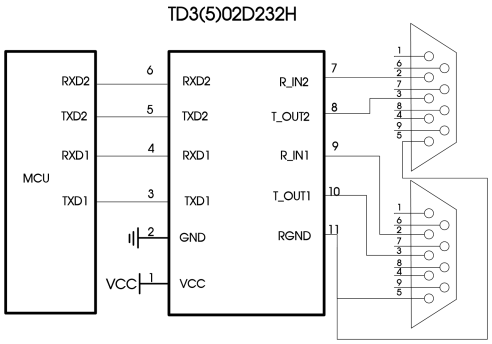

Fig.1

Note：There are two connection modes of DB9 interface connection: direct line and cross line, which are selected according to the actual application.

2. Recommended port protection circuit

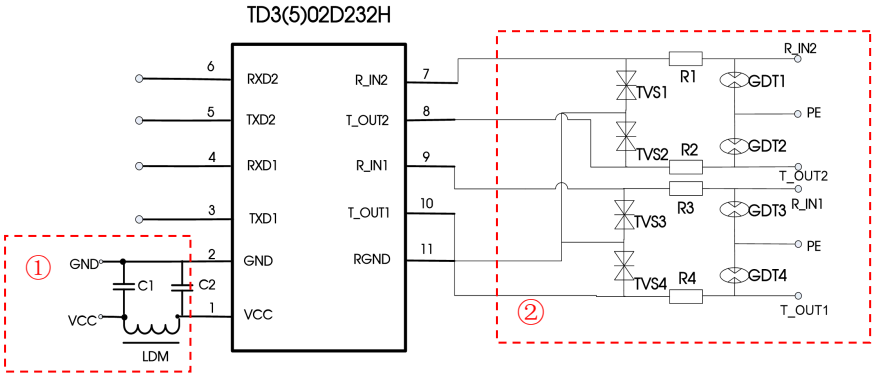

Fig.2

Recommended components and values:

Components	Recommended part, value
C1, C2	1uF/16V
LDM	CD43-12uH
TVS1, TVS2, TVS3, TVS4	SMCJ10CA
R1, R2, R3, R4	12Ω/2W(Wire-wound resistor)
GDT1, GDT2, GDT3, GDT4	S30-A90X

3. Precautions

1) TD502D232H is for 5V TTL level only (not compatible with 3.3V TTL level); TD302D232H is for 3.3V TTL level only (not compatible with 5V).

4. For additional information, please refer to our application note on www.mornsun-power.com

MORNSUN Guangzhou Science & Technology Co., Ltd. reserves the copyright and right of final interpretation

Dimensions and Recommended Layout

THIRD ANGLE PROJECTION

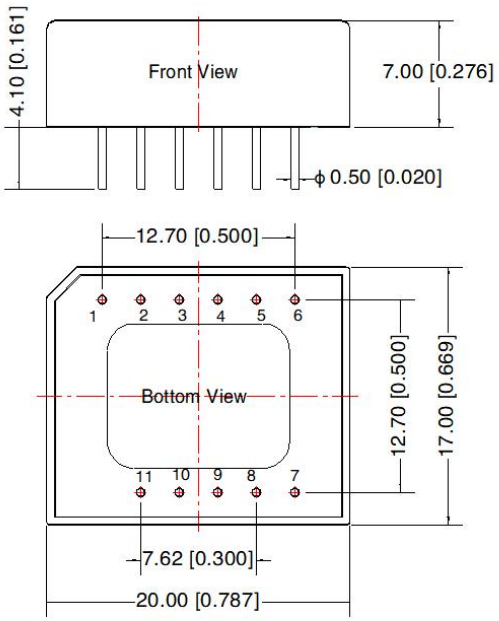

Note:
Unit :mm[inch]
Pin 1/2/3/4/5/6/7/8/9/10/11 : Ø0.5mm
Pin diameter tolerances : ± 0.10[± 0.004]
General tolerances: ± 0.50[± 0.020]
The layout of the device is for reference only, please refer to the actual product

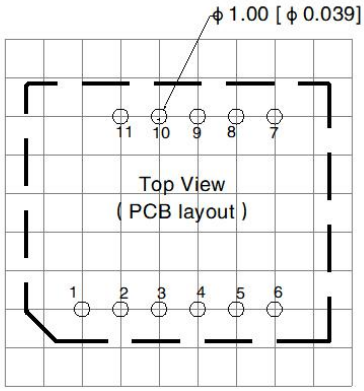

Note: Grid 2.54*2.54mm

Pin-Out		
Pin	Mark	Function
1	VCC	Input Power +
2	GND	GND
3	TXD1	Driver input 1
4	RXD1	Receiver output 1
5	TXD2	Driver input 2
6	RXD2	Receiver output 2
7	R2IN	RS-232 Input 2
8	T2OUT	RS-232 Output 2
9	R1IN	RS-232 Input 1
10	T1OUT	RS-232 Output 1
11	RGND	Isolation Power Output RGND

Notes:

1. For additional information on Product Packaging please refer to www.mornsun-power.com. The Packaging bag number: 58040014;
2. Unless otherwise specified, parameters in this datasheet were measured under the conditions of Ta=25℃, humidity<75%RH with nominal input voltage and rated output load;
3. All index testing methods in this datasheet are based on company corporate standards;
4. The above are the performance indicators of the product models listed in this datasheet. Some indicators of non-standard models will exceed the above requirements. For details, please contact our technical staff;
5. We can provide product customization service, please contact our technical staff;
6. Products are related to laws and regulations: see "Features" and "EMC";
7. Our products shall be classified according to ISO14001 and related environmental laws and regulations, and shall be handled by qualified units.

MORNSUN Guangzhou Science & Technology Co., Ltd.
Address: No. 8 Nanyun 4th Road, Huangpu District, Guangzhou, China
Tel: 86-20-38601850 Fax: 86-20-38601272 E-mail: info@mornsun.cn www.mornsun-power.com

MORNSUN Guangzhou Science & Technology Co., Ltd. reserves the copyright and right of final interpretation