Single high-speed RS485 isolated transceiver module (enhanced)

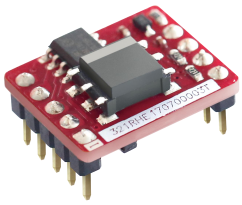

CE Report RoHS

EN62368-1

FEATURES

- Integrated highly efficient isolated DC-DC converter
- High baud rate of up to 500kbps
- Two-port isolation test voltage(3.0kVDC)
- Operating temperature range: -40℃ to +85℃
- The bus supports maximum 256 nodes
- Set isolation and ESD bus protection in one

The main function of the TD321D485H-E / TD521D485H-E series is to convert a logic level signal into isolated RS485 differential level signals. The special integrated IC technology of the RS485 transceiver achieves isolation between the power supply and the signal lines isolation, does RS485 communication and protects the bus all in one and the same module. The product's isolated power supply withstands a test voltage of up to 3000VDC. Also, they can easily be embedded in the user's end equipment, to achieve fully functional RS485 network connections.

Selection Guide

Certification	Part No.	Mark	Power Input (VDC)	Baud Rate (kbps)	Static Current (mA)	Max. Operating Current (mA)	Isolated Power Output (typ.)(VDC)	Number Of Nodes
EN	TD321D485H-E	321RHE	3.15-3.45	500	40	130	5	256
	TD521D485H-E	521RHE	4.75-5.25	500	42	130	5	256

Absolute Limits

Item	Operating Conditions	Min.	Typ.	Max.	Unit
Input Surge Voltage (1sec.max.)	3.3V series	-0.7	--	5	VDC
	5.0V series	-0.7	--	7	
Pin Welding Resistance Temperature	Soldering time 10s max.	--	--	300	℃

3.3V Input Specifications

Item		Symbol	Min.	Typ.	Max.	Unit
Power Supply Input Voltage		V_{CC}	3.15	3.3	3.45	VDC
TXD Logic Level	High-level	V_{IH}	0.7V_{CC}	3.3	3.6	
	Low-level	V_{IL}	0	--	0.8	
RXD Logic Level	High-level	V_{OH}	V_{CC}-0.4	3.1	--	
	Low-level	V_{OL}	0	0.2	0.4	
TXD Drive Current		I_T	2	--	--	mA
CON Drive Current		I_{CON}	--	--	5	
RXD Output Current		I_R	--	--	2	
Serial Interface		Compatible with + 3.3 V UART interface only				

5.0V Input Specifications

Item		Symbol	Min.	Typ.	Max.	Unit
Power Supply Input Voltage		V_{CC}	4.75	5	5.25	VDC
TXD Logic Level	High-level	V_{IH}	0.7V_{CC}	5	5.5	
	Low-level	V_{IL}	0	--	0.8	
RXD Logic Level	High-level	V_{OH}	V_{CC}-0.4	4.8	--	
	Low-level	V_{OL}	0	0.2	0.4	
TXD Drive Current		I_T	2	--	--	mA
CON Drive Current		I_{CON}	--	--	5	
RXD Output Current		I_R	--	--	2	
Serial Interface		Compatible with + 5 V UART interface only				

MORNSUN Guangzhou Science & Technology Co., Ltd. reserves the copyright and right of final interpretation

Transmission Specifications

Item		Symbol	Min.	Typ.	Max.	Unit
Data Delay	TXD Transmitter Delay	t_T	--	--	110	ns
	RXD Receiver Delay	t_R	--	--	110	
Transceiver switching delay time		Switch from receiving data to sending data	--	5	18	us
		Switch from sending data to receiving data	--	30	100	

Output Specifications

Item	Symbol	Min.	Typ.	Max.	Unit
Difference Level	Vdiff(d), R_L=54Ω	1.5	2	--	VDC
Difference load resistance		54	--	--	Ω
Difference Input Impedance	-7V≤V_{CM}≤+12V	96	--	--	kΩ
Built-in pull-down resistor		--	120	--	
Isolated power output voltage*	Nominal input voltage	4.9	5	5.3	VDC
Bus Interface Protection		ESD protection			

Note: *Isolated output power pins are for external pull-up, pull-down resistors only (recommended maximum current <25mA) and are not meant for any other purpose.

Truth Table Specifications

Transceiver Control	Input		Output		
Send status	CON	TXD	A	B	RXD
	0	1	1	0	1
	0	0	0	1	1
Receive status①	CON	V_A-V_B	RXD		
	1	≥-20mV	1		
	1	≤-220mV	0		
	1	-220mV<V_A-V_B<-20mV	Undefined state		

Note:①Receiving threshold varies with Vcc will produce subtle error.

General Specifications

Item	Operating Conditions	Value
Isolation Voltage	Electric Strength Test for 1 min., leakage current <1mA	3000VDC
Insulation Resistance	At 500VDC	1000MΩ (input-output)
Operating Temperature		-40℃ to +85℃
Transportation and Storage Temperature		-50℃ to +105℃
Operating Humidity	Non-condensing	10% - 90%
Safety Standard		EN62368-1 (Report)
Safety Class		CLASS III

Mechanical Specifications

Dimensions	DIP10
Weight	1.9g (Typ.)
Cooling Method	Free air convection

Electromagnetic Compatibility (EMC)

Emissions	CE	CISPR32/EN55032 CLASS A (see Fig. 3)	
Immunity	ESD	IEC/EN 61000-4-2 Contact ±4kV (A, B port)	Perf. Criteria B
		IEC/EN 61000-4-2 Contact ±8kV (see Fig.2, A, B port)	Perf. Criteria B
	EFT	IEC/EN 61000-4-4 ±2kV (see Fig.2, A, B port)	Perf. Criteria B
	Surge	IEC/EN 61000-4-5 ±2kV (line to ground) (without external components, A, B port)	Perf. Criteria B
		IEC/EN 61000-4-5 ±4kV (see Fig.2, A, B port)	Perf. Criteria B
	CS	IEC/EN 61000-4-6 3Vr.m.s	Perf. Criteria A

MORNSUN Guangzhou Science & Technology Co., Ltd. reserves the copyright and right of final interpretation

Application Precautions

1. Carefully read and follow the instructions before use; contact our technical support if you have any question;
2. Do not use the product in hazardous areas;
3. Use only DC power supply source for this product. 220VAC power supply is prohibited;
4. It is strictly forbidden to disassemble the product privately in order to avoid product failure or malfunction;
5. Hot-swap is not supported;
6. If the external input of TXD is insufficient, the pull-up resistor should be added according to the situation;
7. The various components of the product may have inconsistent screens due to different production batches, it does not affect the product performance.

After-sales service

1. Factory inspection and quality control are strictly enforced before shipping any product; please contact your local representative or our technical support if you experience any abnormal operation or possible failure of the module;
2. The products have a 3-year warranty period, from the date of shipment. The product will be repaired or exchanged free of charge within the warranty period for any quality problem that occurs under normal use.

Applied circuit

Refer to the RS485 Isolated Industrial Bus Interface Module Application Manual.

Design Reference

1. Typical application circuit

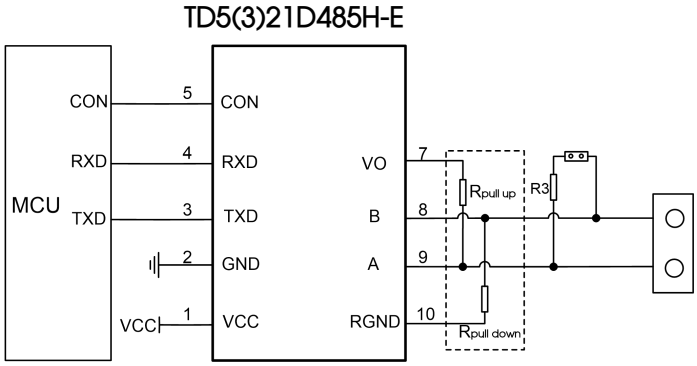

Fig. 1: Typical application

Figure 1 shows a typical connection circuit for the isolated transceiver module TD321D485H-E and TD521D485H-E. The TD521D485H-E module's power supply must be 5V and match the module's TXD, RXD and CON pin interface level of 5V (not supporting any 3.3V system levels). Accordingly, TD321D485H-E module's power supply must be 3.3V and match the module's TXD, RXD and CON pin interface level of 3.3V (not supporting any 5V system levels).

The module has a built-in 120kΩ pull-down resistor, which under normal circumstances meets the demand for the use of internal pull-up and pull-down resistors. Depending on the actual circuit, the use of additional external R pull-up and R pull-down resistor may be chosen.

2. Recommended port protection circuit

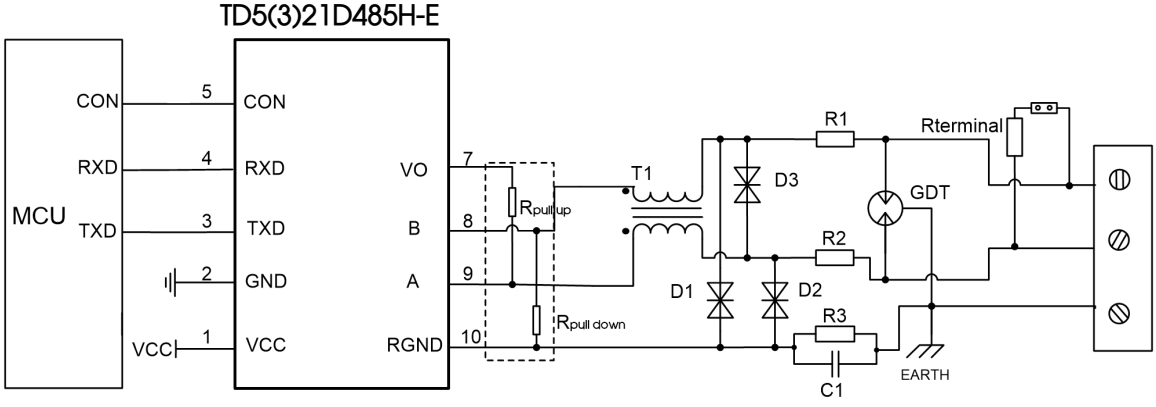

Fig. 2: Port protection circuit for harsh environments

Note: Ground shield of twisted wire pair reliably.

MORNSUN Guangzhou Science & Technology Co., Ltd. reserves the copyright and right of final interpretation

Recommended components and values:

Component	Recommended part, value	Component	Recommended part, value
R3	1MΩ	R1、R2	2.7Ω/2W
C1	1nF, 2kV	D1、D2	SMBJ6.5CA
T1	ACM2520-301-2P	D3	SMBJ6.5CA
GDT	B3D090L	Rterminal	120Ω

As the modules internal A / B lines come with its own ESD protection, which generally satisfy most application environments without the need for additional ESD protection devices, as shown in the typical circuit in Figure 1. For harsh and noisy application environments such as motors, high voltage/current switches, lightning and similar however, we recommended that the user protects the module's A / B lines with additional measures and external components such as TVS, common mode inductors, gas discharge tube, shielded twisted pair of wires with the same single network Earth point. Figure 2 shows our recommended circuit diagram for such type of applications with components and values given in the table above. This recommendation is for reference only and may have to be adapted accordingly with appropriate component values in order to match the actual situation and application.

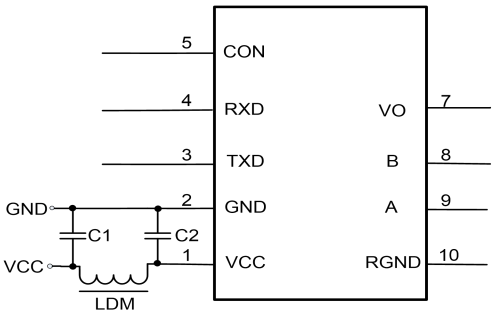

Fig.3

Component	Recommended part, value
C1, C2	1uF/16V
LDM	CD43-12uH

3. Precautions

1) TD521D485H-E is for 5V TTL level only (not compatible with 3.3V); TD321D485H-E is for 3.3V TTL level only (not compatible with 5V).
2) Pin6 are not drawn. Please leave pin 10 open if unused.
3) We recommend using a shielded twisted pair of wires for the Data transmission line and using same single point earth connection for each of the networks.
4) From the truth table characteristics, it can be derived that the isolated RS-485 transceiver module's CON pin is low to send data and high when receiving data. Note that the general 485 transceiver chip control level is exactly the opposite, therefore, if the customer desires to change the level to the ordinary 485 transceiver chip control level, we recommend using a transistor circuit between the MCU and the CON feed to reverse this signal.
5) Reference the truth table characteristics: When the A / B line differential voltage of the series of embedded isolated RS-485 transceiver module is ≥ -20mV, the modules receiving level is high and when the A / B line differential voltage is ≤ -220mV the modules receiving level is low; the modules receiving level is undefined when the A / B line differential voltage is greater than -220mV but less than -20mV, so the design is to ensure that the module will not be receiving this state. Depending on the actual situation, it is up to the user of the RS-485 network design or application to decide whether to add a 120Ω termination resistor. Avoiding data communication errors: Regardless if the RS-485 network is static or dynamic, it is essential to avoid that the differential voltage of A / B line ever comes between -220mV and -20mV.

4. For additional information, please refer to our application note on www.mornsun-power.com

MORNSUN Guangzhou Science & Technology Co., Ltd. reserves the copyright and right of final interpretation

Dimensions and Recommended Layout

THIRD ANGLE PROJECTION

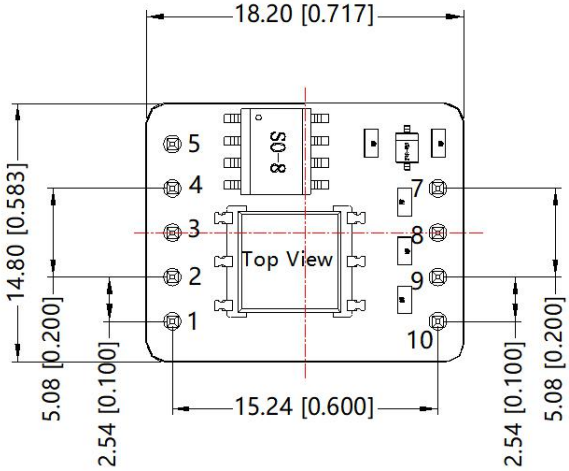

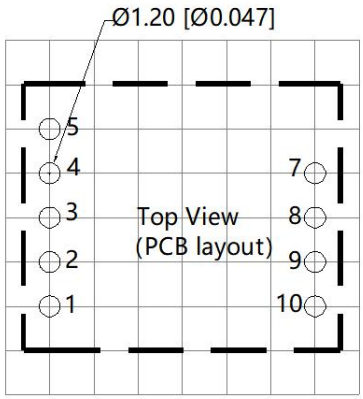

Note: Grid 2.54*2.54mm

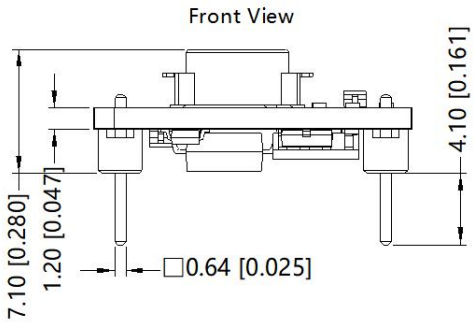

Note:
Unit :mm[inch]
Pin diameter tolerances :±0.10[±0.004]
General tolerances:±1.0[±0.039]

Pin-Out		
Pin	Name	Function
1	VCC	Input Power+
2	GND	GND
3	TXD	Driver Input
4	RXD	Receiver Output
5	CON	Send&Receiving Control Pin
7	Vo	Isolation Power Output +5V
8	B	TD_D485H(-E) B Pin
9	A	TD_D485H(-E) A Pin
10	RGND	Isolation Power Output RGND

Notes:

1. For additional information on Product Packaging please refer to www.mornsun-power.com. Packaging bag number: 58220095;
2. Unless otherwise specified, parameters in this datasheet were measured under the conditions of Ta=25℃, humidity<75%RH with nominal input voltage and rated output load;
3. There may be slight colour difference on the surface of the PCB, which is normal and does not affect product use;
4. All index testing methods in this datasheet are based on company corporate standards;
5. The above are the performance indicators of the product models listed in this datasheet. Some indicators of non-standard models will exceed the above requirements. For details, please contact our technical staff;
6. We can provide product customization service;
7. Products are related to laws and regulations: see "Features" and "EMC";
8. Our products shall be classified according to ISO14001 and related environmental laws and regulations, and shall be handled by qualified units.

MORNSUN Guangzhou Science & Technology Co., Ltd.
Address: No. 8 Nanyun 4th Road, Huangpu District, Guangzhou, China
Tel: 86-20-38601850 Fax: 86-20-38601272 E-mail: info@mornsun.cn www.mornsun-power.com

MORNSUN Guangzhou Science & Technology Co., Ltd. reserves the copyright and right of final interpretation