AC/DC 960W DIN-Rail Power Supply

LITF960-26Bxx Series

MORNSUN®



Report EN62368-1 | UK CA BS EN62368-1 | IEC60950-1 | RoHS

FEATURES

- Universal 3x320-600VAC or 450-800VDC Input voltage
- Active PFC, PF up to 0.94
- Operating ambient temperature range: -30℃ to +70℃, 60 ℃ @ 100% load without
- Standard DIN-Rail mounting
- High efficiency, high reliability
- LED indicator for output status
- 150% peak power lasts for 4s
- Output short circuit, over-current, over-voltage, over-temperature protection
- Supporting parallel (2+1 current sharing) and series
- Fault alarm function, DC OK, constant current
- Double-sided conformal coating, salt-spray proof
- 485 Communication, remote shutdown (PS ON)
- Operating altitude up to 5000m
- OVC Ⅲ (Safety according to EN61010)
- 3 years warranty
- Design refer to ANSI/ISA 71.04-2013 G3
- Design refer to IEC/UL62368, IEC/EN61000, EN61010, CISPR32/EN55032, UL508

LITF960-26Bxx is Mornsun AC-DC three-phase Din-Rail switching power supply. It features cost-effective, low-power consumption, high efficiency, high reliability and security isolation. With 150% power reserve, enough to support starting DC motor or capacitive load and other heavy load. These converters offer excellent EMC performance and meet IEC/UL/EN62368, IEC/EN61000, UL/EN61010, CISPR32/EN55032, UL508 standards and they are widely used in areas of industrial control equipment, factory automation and mechanical and electrical equipment and other industrial control fields.

Selection Guide

Certification	Part No.	Output Power (W)	Nominal Output Voltage and Current (Vo/Io)	Output Voltage Adjustable Range (V)	Efficiency at 3X 400VAC (%) Typ.	Max. Capacitive Load (μF)
EN/BIS	LITF960-26B24	960	24V/40A	24-28	95.3	40000
	LITF960-26B36		36V/26.6A	36-42	95.4	20000
	LITF960-26B48		48V/20A	48-56	95.4	20000

Input Specifications

Item	Operating Conditions		Min.	Typ.	Max.	Unit
Input Voltage Range	Rated input (Certified voltage)		380	--	480	VAC
	AC input		320	--	600	
	DC input		450	--	800	VDC
Input Voltage Frequency			47	--	63	Hz
Input Current	400VAC		--	--	2.0	A
	480VAC		--	--	1.6	
Inrush Current	400VAC	Cold start	--	3.5	--	

MORNSUN Guangzhou Science & Technology Co., Ltd. reserves the copyright and right of final interpretation

	480VAC		--	5.0	--	
Power Factor	400VAC	Normal temperature, rated load	0.86	0.94	--	--
	480VAC		0.88	0.93	--	
Leakage Current	480VAC		<2mA			
Hot Plug			Unavailable			

Output Specifications

Item	Operating Conditions		Min.	Typ.	Max.	Unit
Output Voltage Accuracy	Full load range		--	±1	--	%
Line Regulation	Rated load		--	±0.5	--	
Load Regulation	0% - 100% load		--	±0.5	--	
Ripple & Noise*	20MHz bandwidth (peak-to-peak value)	24V	--	--	150	mV
		36V	--	--	200	
		48V	--	--	220	
Temperature Coefficient			--	±0.03	--	%/℃
Minimum Load			0	--	--	%
Standby Power	400VAC		--	10	--	W
	480VAC		--	12	--	
Hold-up Time	400VAC		--	25	--	ms
	480VAC		--	25	--	
Short Circuit Protection			Constant current mode, continuous, self-recover			
Over-current Protection			120% - 150% Io, enter constant current mode after 4-4.5s of normal output, automatic recover after fault condition is removed			
			⩾150% Io, enter constant current mode immediately, automatic recover after fault condition is removed			
Over-voltage Protection	24V		⩽35VDC (Hiccup, self-recover)			
	36V		⩽48VDC (Hiccup, self-recover)			
	48V		⩽60VDC (Hiccup, self-recover)			
Over-temperature Protection	Over-temperature protection start		--	--	85	℃
	Over-temperature protection release		65	--	--	

Note: *The "Tip and barrel method" is used for ripple and noise test, output parallel 47uF electrolytic capacitor and 0.1uF ceramic capacitor, please refer to Enclosed Switching Power Supply Application Notes for specific information.

General Specifications

Item		Operating Conditions	Min.	Typ.	Max.	Unit
Isolation Test	Input - ⏚	Electric strength test for 1min, leakage current<10mA	2500	--	--	VAC
	Input - output	Electric strength test for 1min, leakage current<5mA	4000	--	--	
	Output - ⏚	Electric strength test for 1min, leakage current<10mA	500	--	--	
	Output - DC OK	Electric strength test for 1min, leakage current<1mA	500	--	--	
Insulation Resistance	Input - ⏚	Environment temperature: 25±5℃ Relative humidity: <95%, non-condensing Test voltage: 500VDC	50	--	--	MΩ
	Input - output		50	--	--	
	Output - ⏚		50	--	--	
Operating Temperature			-30	--	70	℃
Storage Temperature			-40	--	85	
Storage Humidity		Non-condensing	20	--	90	%RH
Operating Humidity			10	--	95	

MORNSUN Guangzhou Science & Technology Co., Ltd. reserves the copyright and right of final interpretation

Switching Frequency*	PFC		40	--	300	kHz
	DC-DC		40	--	150	
Power Derating	Operating temperature derating	+60℃ to +70℃	2.5	--	--	%/℃
	Input voltage derating	320VAC - 350VAC	0.667	--	--	%/VAC
Safety Standard*			IEC62368-1 safety approved & EN62368-1 (Report) Design refer to UL62368-1, UL508, UL61010-1, EN/UL61010-2-201			
Safety Class			CLASS I, ANSI/ISA71.04-2013			
MTBF	MIL-HDBK-217F@25℃		≥250,000 h			
Pollution Degree	2					

Note:1.*The power supply has two converters with two different switching frequencies.
2.* Indoor use meets UL 61010 certification standards.

Mechanical Specifications

Case Material	Metal (AL5052, SPCC)
Dimensions	110.00mm x 124.00mm x 127.00mm
Weight	1790 g (Typ.)
Cooling Method	Free air convection

Electromagnetic Compatibility (EMC)

Emissions	CE	CISPR32/EN55032 CLASS B	
	RE	CISPR32/EN55032 CLASS B	
	Harmonic current	IEC/EN61000-3-2 CLASS A	
Immunity	ESD	IEC/EN 61000-4-2 Contact ±8KV/Air ±15KV	perf. Criteria A
	RS	IEC/EN 61000-4-3 10V/m	perf. Criteria A
	EFT (input)	IEC/EN 61000-4-4 ±4KV	perf. Criteria A
	EFT (output)	IEC/EN 61000-4-4 ±2KV	perf. Criteria A
	EFT (DC OK)	IEC/EN 61000-4-4 ±2KV	perf. Criteria A
	Surge (input)	IEC/EN 61000-4-5 line to line ±2KV/line to PE ±4KV	perf. Criteria A
	Surge (output)	IEC/EN 61000-4-5 Vo+ to Vo- ±500V/Vo+/Vo- to PE ±1KV	perf. Criteria A
	Surge (DC OK)	IEC/EN 61000-4-5 DC OK to PE ±1KV	perf. Criteria A
	CS	IEC/EN61000-4-6 20 Vr.m.s	perf. Criteria A
	Voltage dips, short interruptions and voltage variations immunity	IEC/EN61000-4-11 0% 70%	perf. Criteria A
	Intercom interference test	MS-SOP-DQC-007	perf. Criteria A

Functional Specifications

Item	Operating Conditions		Min.	Typ.	Max.	Unit
Remote Control Switch	0 - 0.8VDC power turn-on		0	--	0.8	VDC
	4 - 20VDC power turn-off		4	--	20	
DC OK Signal	Full input voltage range, full load range	DC OK power on	0.95Vo - Vo			
		DC OK power off	<0.90Vo			
Current Sharing Accuracy*	When multiple units are connected in parallel, the sub-modules shunt more than 50% of the rated load		--	±5	--	%
LED Signal	Main output status indication	Normal output >95%	Green On			
		Over-current or Over-temperature protection	Red On			
		Power Off (No AC input) or PS ON Off	Turn-off			
RS485-A, RS485-B			RS485 communication			

Note: *When multiple units work with current sharing, the output voltage deviation of each prototype working alone shall not exceed 100mV.

MORNSUN Guangzhou Science & Technology Co., Ltd. reserves the copyright and right of final interpretation

Environmental Characteristics

Item	Operating Conditions	Standard
High and Low Temperature Working	+70℃, -30℃	GB2423.1, IEC60068-2-1
Sinusoidal Vibration	10 - 500Hz, 2g, three directions of X, Y, Z axis	GB2423.10, IEC60068-2-6
Salt Mist	+35℃, 5%NACL, 16h	GB2423.17, IEC60068-2-11
Low Temperature Storage	-40℃	GB2423.1, IEC60068-2-1
High Temperature Storage	+85℃	GB2423.2, IEC60068-2-2
High Temperature Aging	+60℃	GB2423.2, IEC60068-2-2
Normal Temperature Aging	+25℃	GB2423.1, IEC60068-2-1
Temperature Shock	-40℃ to +85℃	GB2423.22, IEC60068-2-14
Temperature Cycle	-30℃ to +60℃	GB2423.22, IEC60068-2-14
Hot and Humid	+85℃, 85%RH	GB2423.50, IEC60068-2-67
Random Vibration	5 - 10Hz, ASD 0.3 - 10g²/Hz, three directions of X, Y, Z axis	GB/T 4798.2-2008, IEC60721-3-2
Sinusoidal Vibration Response	10 - 150Hz, 1g, three directions of X, Y, Z axis	GB/T 11287-2000, IEC60255-21-1
Sinusoidal Vibration Endurance Test		
Sinusoidal Impulse Response	15g, pulse duration 11ms, three times in each direction of X, Y, Z axis	GB/T 114537-1993, IEC60255-21-2
Sinusoidal Impact Endurance Test		
Packaging Drop	1m, one corner, three edges and six sides	GB2423.8, IEC68-2-32

Product Characteristic Curve

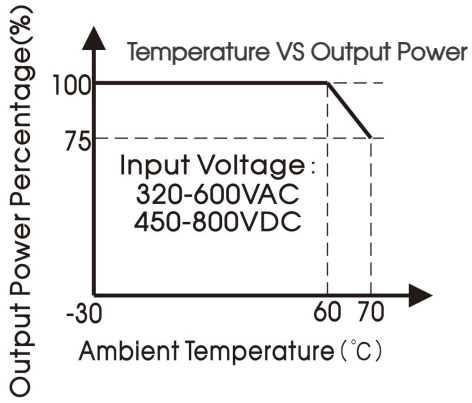

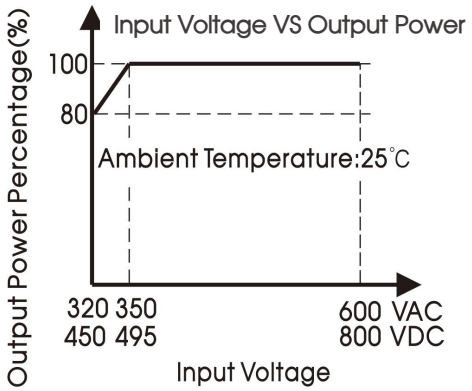

Note: 1. All curves are for 24V output, measured at input 3x400VAC, 50Hz, output Io, ambient temperature 25℃, unless otherwise stated;

2. With an AC input voltage between 320 - 350VAC and a DC input between 450 - 495VDC the output power must be derated as per the temperature derating curves;

3. This product is suitable for applications using natural air cooling; for applications in closed environment please consult Mornsun's FAE;

4. The operating temperature and the ambient temperature are determined according to the air temperature at 2cm below the power supply.

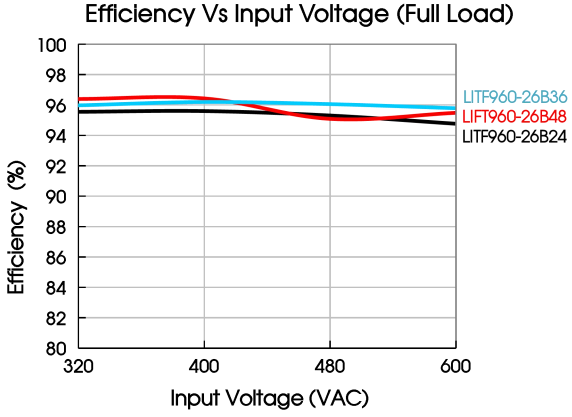

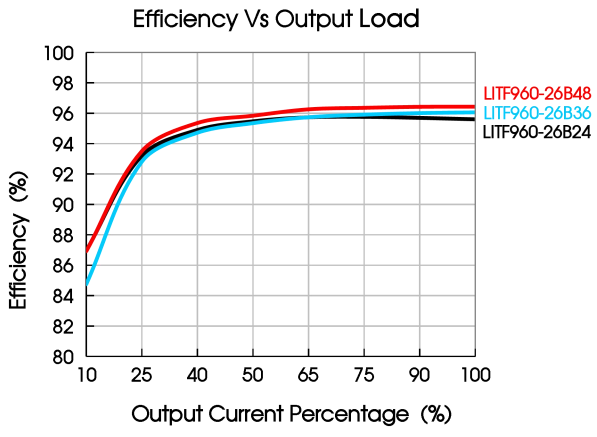

MORNSUN Guangzhou Science & Technology Co., Ltd. reserves the copyright and right of final interpretation

Installation Diagram

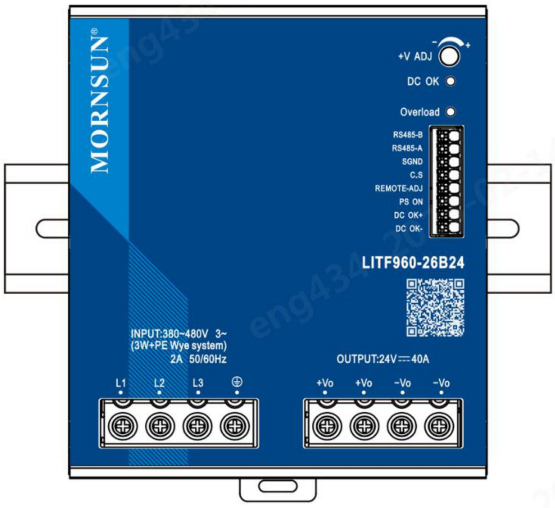

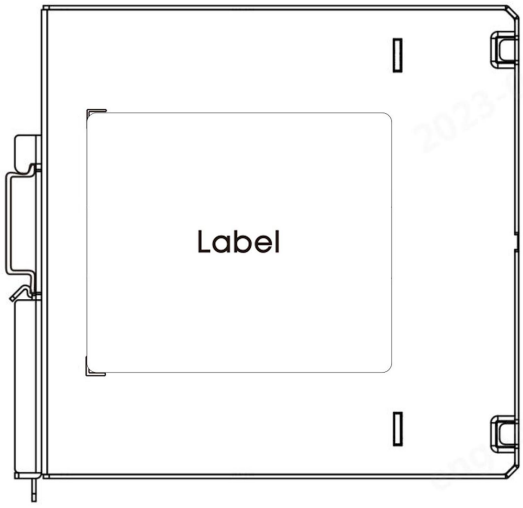

Note: Keep the following installation clearances: 40mm on top, 20mm on the bottom, 5mm on the left and right sides are recommended when the device is loaded permanently with more than 50% of the rated power. Increase this clearance to 15mm in case the adjacent device is a heat source (e.g. another power supply).

Materials required in the installation		
1	Product	1 PC
2	Phillips screwdriver Slotted screwdriver	1 PC
3	TS35/7.5 or TS35/15	1 PC
4	20–6AWG wires	/ PCS
	The content is for reference only. Regarding the actual wire diameter and tightening torque, refer to the dimensional drawing.	



Product



Phillips screwdriver
Slotted screwdriver
Diameter of the cutting
Diameter: 3mm

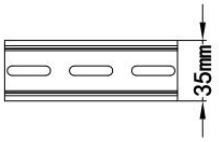

TS35/7.5 or TS35/15

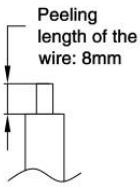

20–6AWG Wires

Installation Steps ①–②

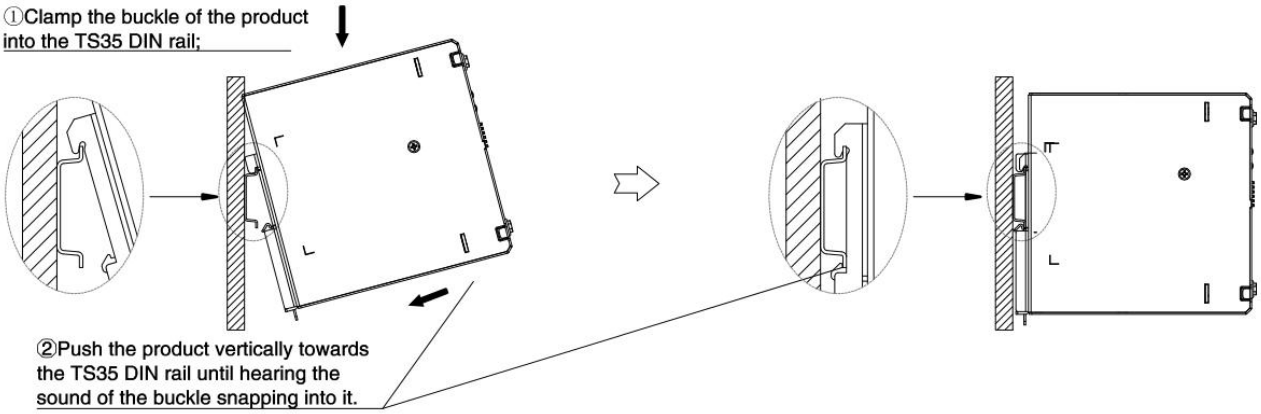

Disassembly Steps ③–④

MORNSUN Guangzhou Science & Technology Co., Ltd. reserves the copyright and right of final interpretation

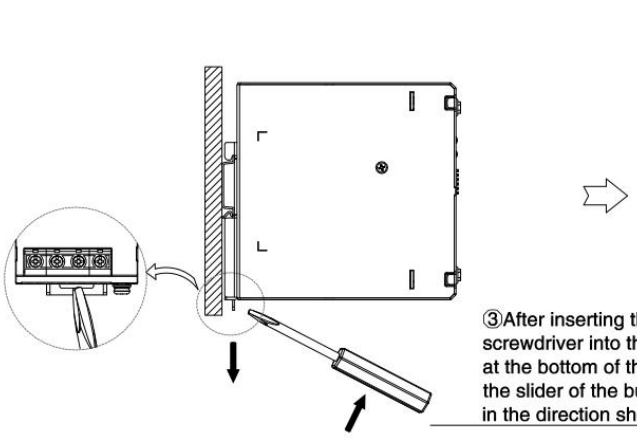

③After inserting the Slotted screwdriver into the square groove at the bottom of the buckle, push the slider of the buckle downward in the direction shown in the figure.

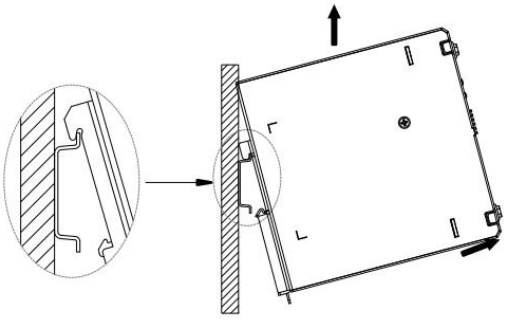

④Hold the bottom of the product and push it outwards, then lift the product up to take the product out of the DIN rail.

Wiring / Unwiring Steps ⑤–⑥

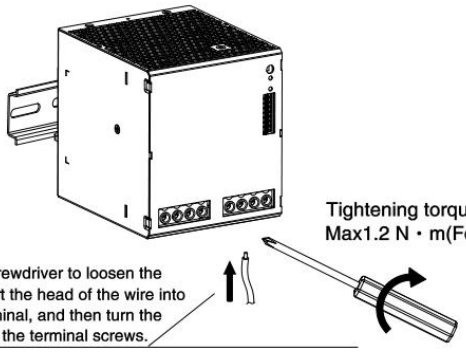

Tightening torque:
Max1.2 N · m(For reference);

⑤Use the Phillips screwdriver to loosen the terminal screws, insert the head of the wire into the bottom of the terminal, and then turn the screwdriver to tighten the terminal screws.

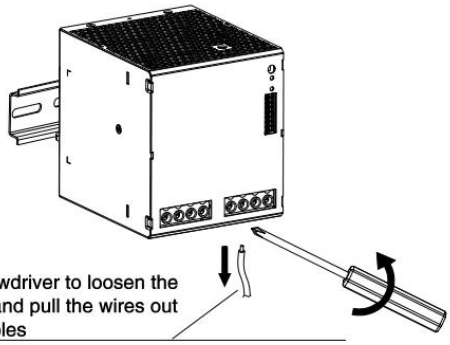

⑥The Phillips screwdriver to loosen the terminal screws and pull the wires out of the terminal holes

Dimensions and Recommended Layout

THIRD ANGLE PROJECTION

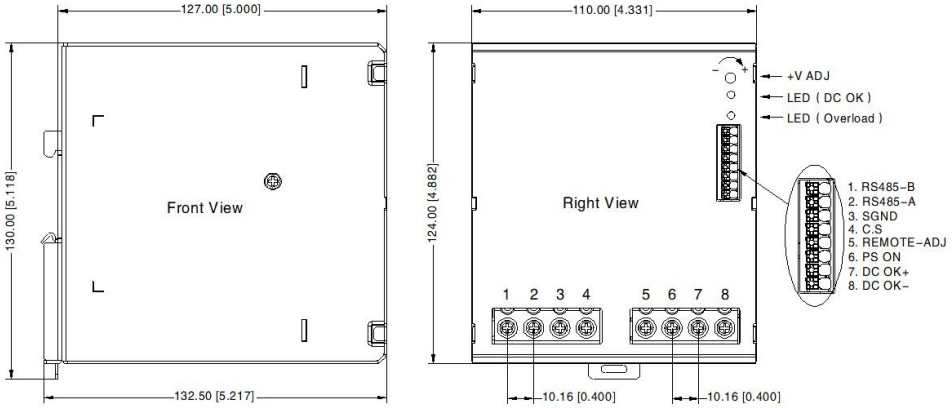

Pin-Out	
Pin	Mark
1	L1
2	L2
3	L3
4	⏚
5	+Vo
6	+Vo
7	-Vo
8	-Vo

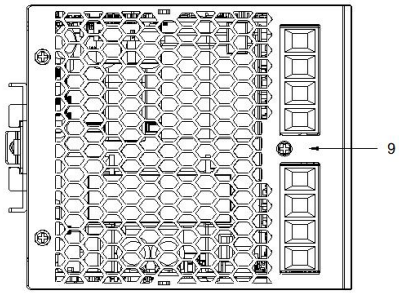

Bottom View

9 must be connected to the earth(⏚)

Note:
Unit: mm[inch]
ADJ: Output adjustable resistor
Wire range: Input; 20-6AWG
Output; 24V 10-6AWG
36V 12-6AWG
48V 14-6AWG
Signal; 22-16AWG
Input Tightening torque: 1.2 N·m ± 10%
Output Tightening torque: 1.2 N·m ± 10%
Mounting rail: TS35, rail needs to connect safety ground
General tolerances: ± 1.00[± 0.039]

MORNSUN Guangzhou Science & Technology Co., Ltd. reserves the copyright and right of final interpretation

WARNING Risk of electrical shock, fire, personal injury or death:
AVERTISSEMENT AVERTISSEMENT Risque de choc électrique, d'incendie, de blessures corporelles ou de décès :

1. Do not use the power supply without proper grounding (Protective Earth). Use the terminal on the input block for earth connection and not one of the screws on the housing;
   N'utilisez pas l'alimentation électrique sans mise à la terre appropriée (Terre protectrice). Utilisez le terminal sur le bloc d'entrée pour la connexion terrestre et non pas une des vis sur le boîtier;
2. Turn power off before working on the device, protect against inadvertent re-powering;
   Éteignez l'alimentation avant de travailler sur l'appareil, protégez-vous contre la réénergisation accidentelle;
3. Make sure that the wiring is correct by following all local and national codes;
   Assurez-vous que le câblage est correct en suivant tous les codes locaux et nationaux;
4. Do not modify or repair the unit;
   Ne modifiez pas ou ne réparez pas l'appareil;
5. Do not open the unit as high voltages are present inside;
   Ne modifiez pas ou ne réparez pas l'appareil;
6. Use caution to prevent any foreign objects from entering the housing;
   Faire preuve de prudence pour empêcher les objets étrangers d'entrer dans le logement;
7. Do not use in wet locations or in areas where moisture or condensation can be expected;
   Faire preuve de prudence pour empêcher les objets étrangers d'entrer dans le logement;
8. Do not touch during power-on, and immediately after power-off, hot surfaces may cause burns;
   Ne touchez pas pendant l'alimentation et, immédiatement après l'alimentation, les surfaces chaudes peuvent causer des brûlures.
9. Use copper conductors only;
   N'utiliser que des conducteurs en cuivre;
10. OPEN EQUIPMENT: Adequate protection against contact with live parts and ingress of dust and water must be ensured through installation in a suitable enclosure(e.g. control cabinet, control box console or similar).

Note:

1. For additional information on Product Packaging please refer to www.mornsun-power.com, Packaging bag number: 58220331;
2. Unless otherwise specified, parameters in this datasheet were measured under the conditions of Ta=25℃, humidity<75%RH with nominal input voltage and rated output load;
3. The room temperature derating of 3.5℃/1000m is needed for operating altitude greater than 2000m;
4. All index testing methods in this datasheet are based on our company corporate standards;
5. In order to improve the efficiency at high input voltage, there will be audible noise generated, but it does not affect product performance and reliability;
6. We can provide product customization service, please contact our technicians directly for specific information;
7. Products are related to laws and regulations: see "Features" and "EMC";
8. The out case needs to be connected to the earth (⏚)of system when the terminal equipment in operating;
9. The output voltage can be adjusted by the ADJ, clockwise to increase;
10. Our products shall be classified according to ISO14001 and related environmental laws and regulations, and shall be handled by qualified units;
11. The power supply is considered a component which will be installed into a terminal equipment. All EMC tests should be confirmed with the final equipment. Please consult our FAE for EMC test operation instructions.

Mornsun Guangzhou Science & Technology Co., Ltd.

Address: No. 8 Nanyun 4th Road, Huangpu District, Guangzhou, China

Tel: 86-20-38601850 Fax: 86-20-38601272 E-mail: info@mornsun.cn www.mornsun-power.com

MORNSUN Guangzhou Science & Technology Co., Ltd. reserves the copyright and right of final interpretation

LITF960-26Bxx Power Supply Application Notes

MORNSUN Guangzhou Science & Technology Co., Ltd. reserves the copyright and right of final interpretation

Content

1. Mechanical Specification 10
1.1 Input Terminal (CN100) 10
1.2 Output Terminal (CN201) 10
1.3 Signal Terminal (CN200) 11
1.4 Red And Green Status Display LEDS 11
1.5 Output Voltage Adjustment Knob 12
2. Function Manual 12
2.1 Input Requirements 12
2.2 Output Requirements 12
2.3 Starting Time 13
2.4 Output Over-Voltage Protection (OVP) 13
2.5 Output Over-Current And Short Circuit Protection (OCP And SCP) 13
2.6 Over Temperature Protection (OTP) 14
2.7 Output Power Derating 14
2.8 Remote Control Switch 15
2.9 Remote Voltage Regulation 16
2.10 DC OK Signal 16
2.11 Used In Series 17
2.12 Work In Parallel 17
2.12.1 Current Share 17
2.13 RS485 Communication 19
2.14 Available In 3-Phase 2-Wire Systems 20
2.15 Back Voltage Load 21
3. Installation Requirements 21
3.1 Safety Introduction 21
3.2 Safety Requirements 22
3.3 Installation Method 22

MORNSUN Guangzhou Science & Technology Co., Ltd. reserves the copyright and right of final interpretation

1. Mechanical Specification

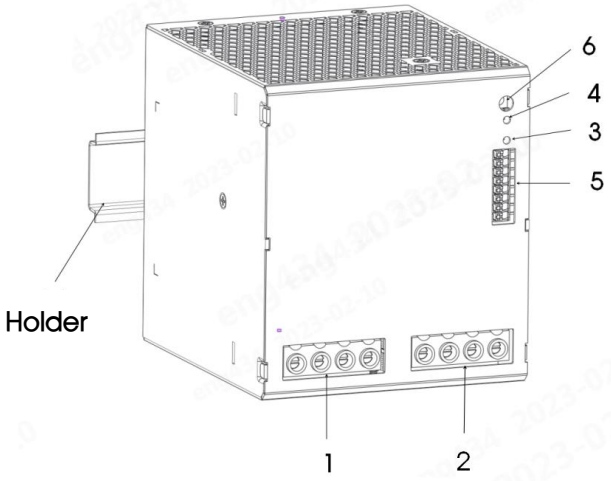

Structure Instruction	
1	Input terminal (CN100)
2	Output terminal (CN201)
3	Red status display LED lights
4	Green status display LED lights
5	Signal terminal (CN200)
6	Output voltage adjustment knob

1.1 Input Terminal (CN100)

4 Position 6.35 mm Barrier Terminal Blocks is used as Input terminal.

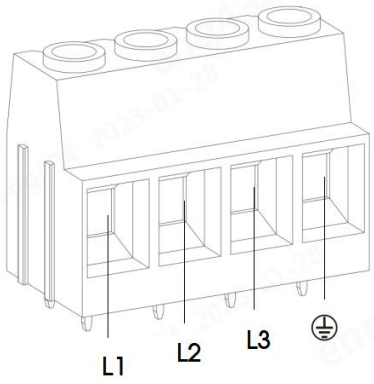

Line size: 20-6AWG
Torque: 1.2 N · m

Pin	Features
L1	Live
L2	Live
L3	Live
⏚	Protective Earth

1.2 Output Terminal (CN201)

4 Position 6.35 mm Barrier Terminal Blocks is used as Output terminal.

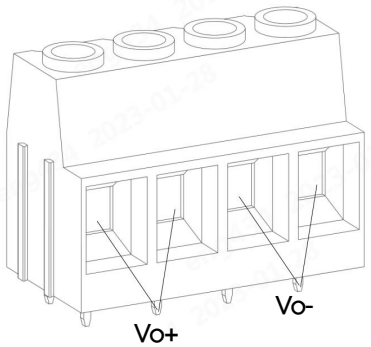

Line size: 20-6AWG
Torque: 1.2 N · m

Pin	Features
Vo+	Positive output
Vo-	Negative output

MORNSUN Guangzhou Science & Technology Co., Ltd. reserves the copyright and right of final interpretation

1.3 Signal Terminal (CN200)

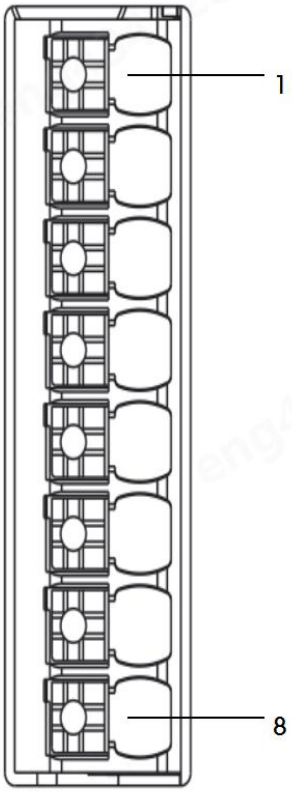

Pin	Mark	Features
1	RS485-B	485 communication
2	RS485-A	485 communication
3*	SGND	Signal terminal reference ground
4	C.S	Current sharing
5	REMOTE-ADJ	Remote voltage regulation
6	PS ON	Remote control signal
7	DC OK+	Output status label
8	DC OK-	Output status label
Note: *The reference ground of all pins on the signal terminal is pin 3.		

1.4 Red And Green Status Display LEDS

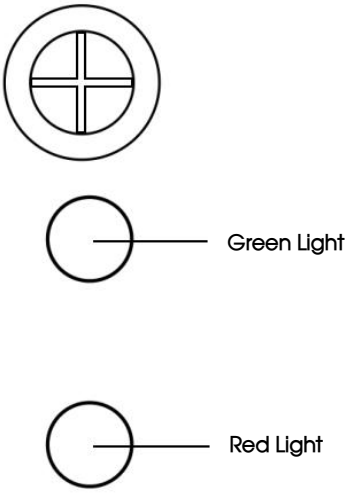

Green Light	Red Light	Status*
On	Off	Normal work
Off	On	Over-current or Over-temperature protection
Off	Off	Power Off (No AC input) or PS ON Off
Note: *The LED lights indicate different working status of the power supply		

MORNSUN Guangzhou Science & Technology Co., Ltd. reserves the copyright and right of final interpretation

1.5 Output Voltage Adjustment Knob

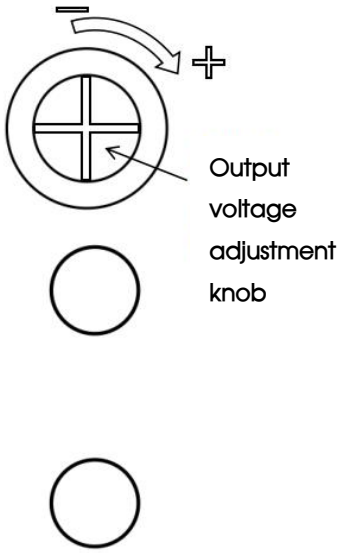

Model	Rated Output Voltage	Output Voltage Adjustable Range
LITF960-26B24	24VDC	24VDC-28VDC
LITF960-26B36	36VDC	36VDC-42VDC
LITF960-26B48	48VDC	48VDC-56VDC

2. Function Manual

2.1 Input Requirements

The AC input voltage and DC input voltage must be within the defined amount of electricity (reference data sheet), otherwise the power supply may not work properly or even malfunction. A 600V/6.3A fuse has been connected in series between the L1/L2 /L3 line inside the power supply. For better protection of the module, it is recommended that customers use a circuit breaker of no more than 6.3A. (Just for strengthen the protective purpose, not essential requirements)

2.2 Output Requirements

At any output voltage value, if it is necessary to operate normally, the highest pull current and power must not exceed the rated specified value, and the output current must not exceed the maximum output current value.

MORNSUN Guangzhou Science & Technology Co., Ltd. reserves the copyright and right of final interpretation

2.3 Starting Time

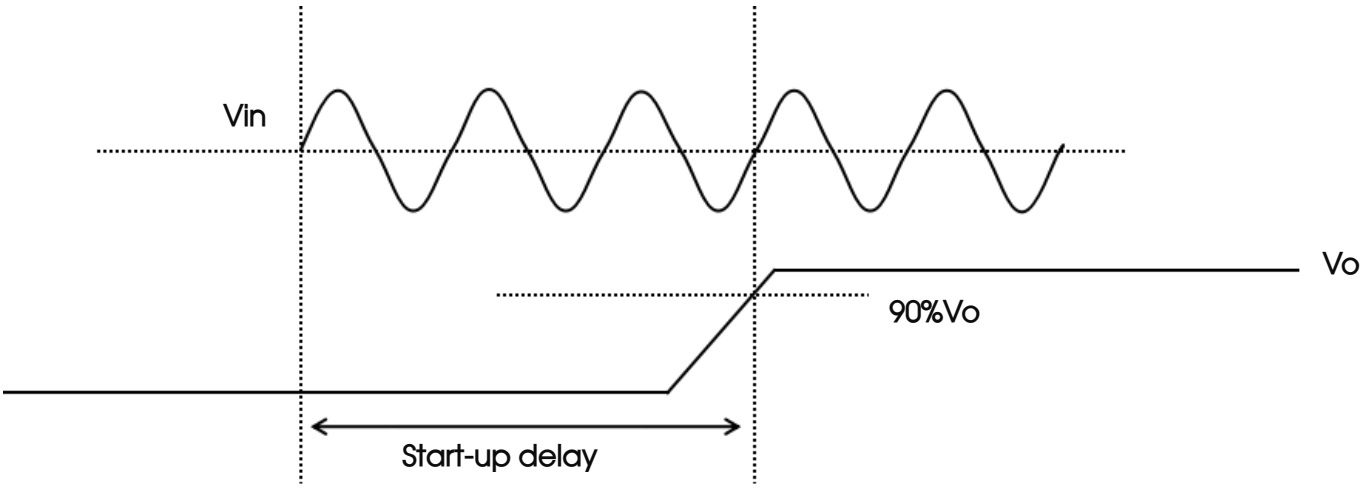

Item	Working conditions	Min.	Typ.	Max.	Unit
Start-up delay time	400VAC, full load	--	--	1	s

2.4 Output Over-Voltage Protection (OVP)

The main circuit output will be off when the output voltage reaches the over-voltage protection value. When it occurs, the output enters the hiccup mode with 1s. After the abnormal removed, the output returns to normal.

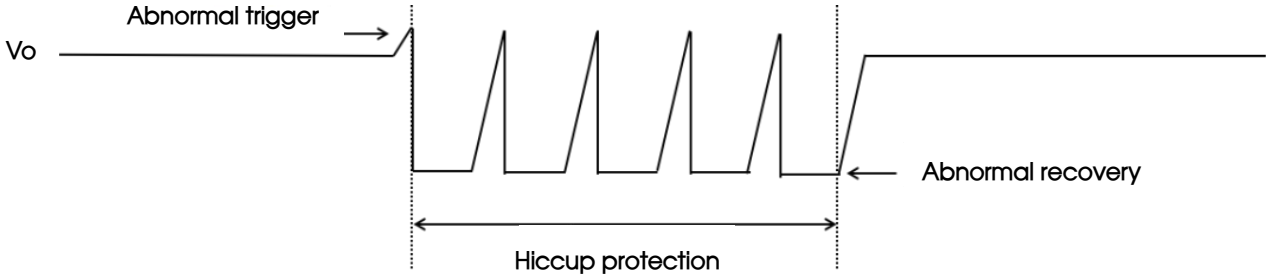

2.5 Output Over-Current And Short Circuit Protection (OCP And SCP)

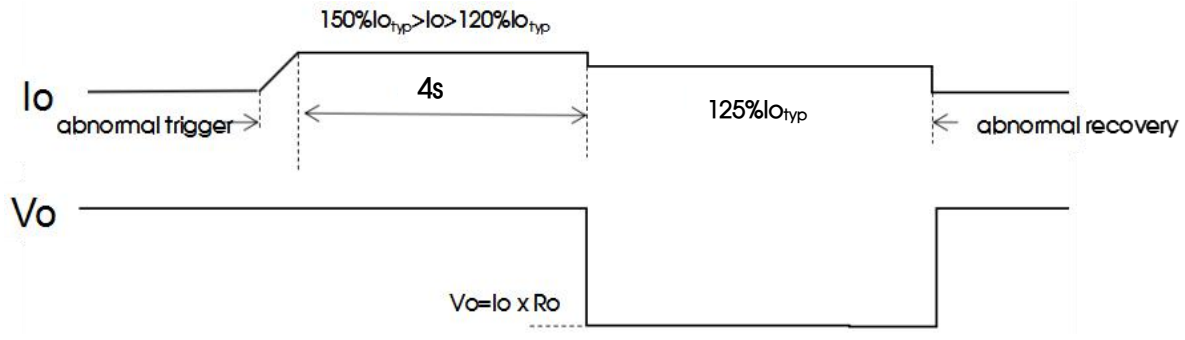

Constant current mode 1

MORNSUN Guangzhou Science & Technology Co., Ltd. reserves the copyright and right of final interpretation

Constant current mode1: When the output current exceeds 120% of the rated output current and does not exceed 150% of the rated output current, the output will work normally for 4S and then enter the constant current mode, the constant current is 125%-135% of the rated output current, and the output voltage drop, after the abnormal removed, self-recover.

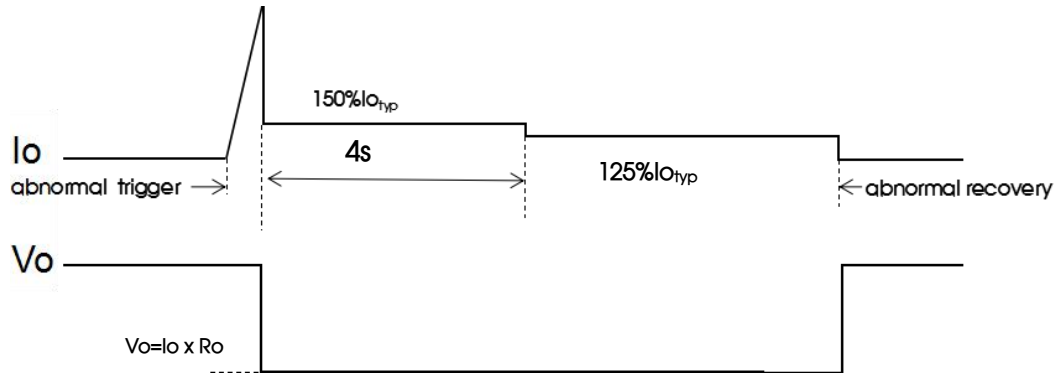

Constant current mode 2

Constant current mode 2: When the output current exceeds 150% of the rated output current, output will enter the constant current model, the current will maintain a 150% rated output for 4S, then enter 125%-135% rated output current and the output voltage will fall, after the abnormal removed, self-recover.

Note: The output voltage at constant current is determined by the output load, that is, Vo =Io x Ro. Where Io represents the current value at constant current. Ro means output load value.

2.6 Over Temperature Protection (OTP)

When the ambient temperature of the power supply exceeds the rated temperature for a period of time, the power supply will turn off the output and enter the hiccup status. After the ambient temperature drops to the set value, the power supply will resume normal operation.

2.7 Output Power Derating

When the input voltage is greater than 350VAC (or 495VDC), only need to derate according to the temperature derating curve;

When the input voltage is lower than 350VAC (or 495VDC), the output power will be derated according to the following input voltage derating curve requirements after the temperature derating.

MORNSUN Guangzhou Science & Technology Co., Ltd. reserves the copyright and right of final interpretation

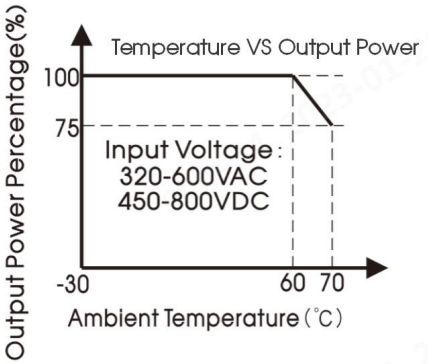

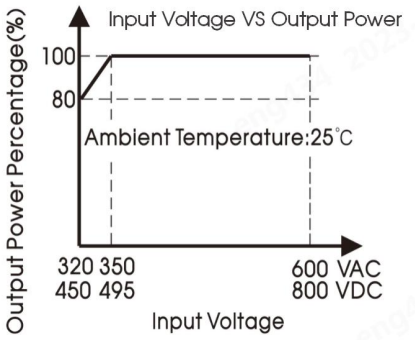

2.8 Remote Control Switch

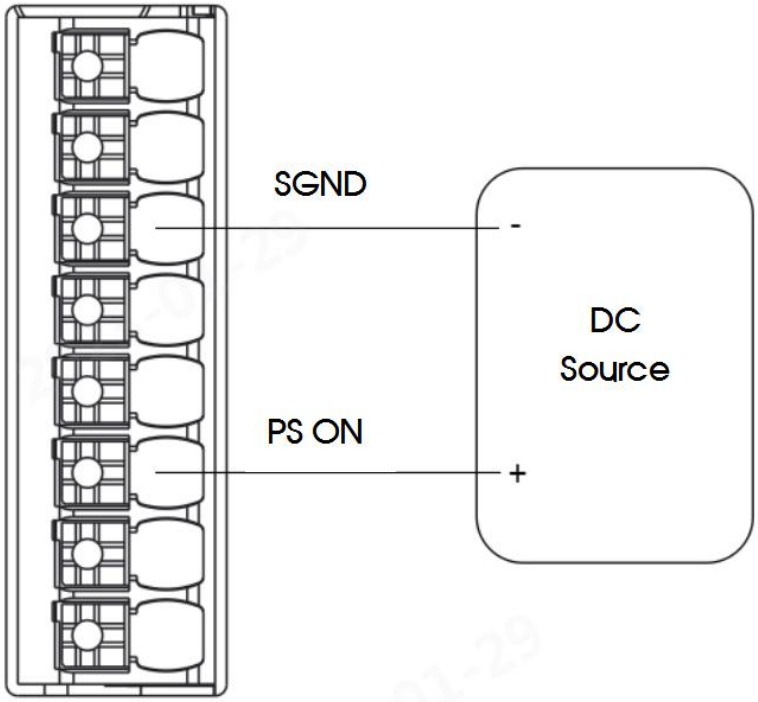

Between PS ON (Pin6) and SGND (Pin3) Voltage	Output Status
DC Source power supply voltage is less than 0.8VDC	Normal output
DC Source supply voltage is greater than 4VDC less than 20VDC	Output Off

If the power module is connected to the power supply, it can be controlled by the external voltage between the PS ON signal pin and SGND.

MORNSUN Guangzhou Science & Technology Co., Ltd. reserves the copyright and right of final interpretation

2.9 Remote Voltage Regulation

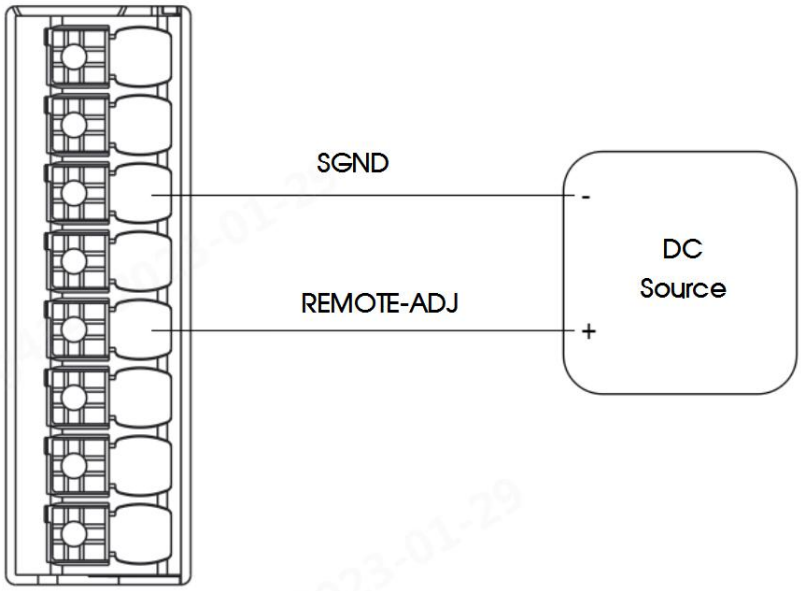

If the input end of the power module is connected to the power supply, the output voltage can be controlled within the specifications by using the external voltage (3V to 18V) between the REMOTE-ADJ signal pin and SGND, as shown in the figure.

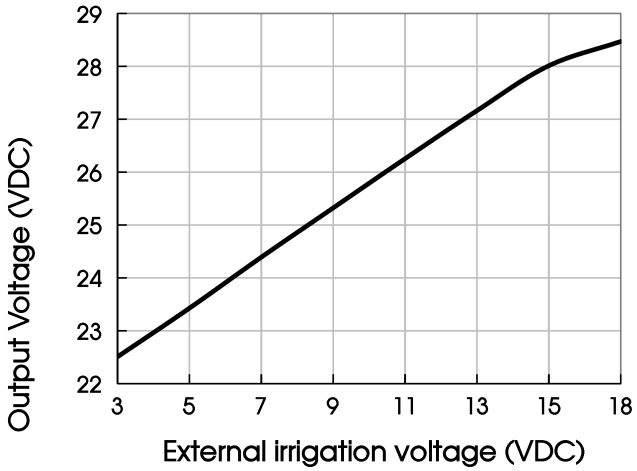

2.10 DC OK Signal

The DC OK signal is used to monitor whether the power supply is working normally. This signal is on the DC OK pin of the signal terminal CN200. When the output is greater than 95% of the rated voltage of the output, the DC OK signal is activated, the DC OK at the signal terminal is connected, and the green light is on at the same time. When the output voltage is less than 90% of the rated voltage of the output, the DC OK of the signal terminal is disconnected, and the green light is off at the same time.

MORNSUN Guangzhou Science & Technology Co., Ltd. reserves the copyright and right of final interpretation

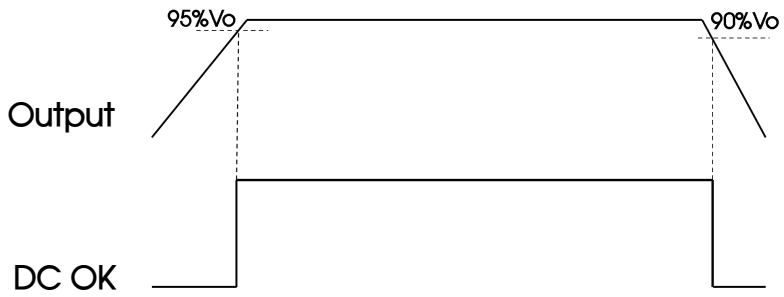

2.11 Used In Series

Voltages in excess of 150VDC are no longer considered Safety Extra Low Voltage Circuits (SELV) and can therefore be dangerous. When installing such voltages, it must be protected against touch.

Keep a 15mm (left/right) installation gap between the two power supplies and avoid installing the power supplies on top of each other. Do not connect the power supplies in series in an installation orientation other than the standard installation orientation (input terminals down).

Note that leakage current, electromagnetic interference, inrush current and harmonics will increase when multiple power supplies are used.

Refer to the figure below for the wiring method:

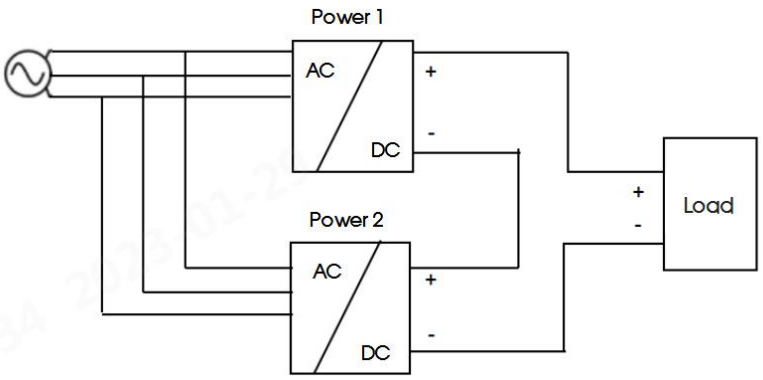

2.12 Work In Parallel

2.12.1 Current Share

The current sharing bus (C.S) between multiple units is short-circuited with each other.

The output voltage difference of each single module is less than or equal to 100mV, and a better comprehensive effect of line terminal output voltage and current sharing can be obtained. The wiring method of the current sharing function is shown in the following figure:

MORNSUN Guangzhou Science & Technology Co., Ltd. reserves the copyright and right of final interpretation

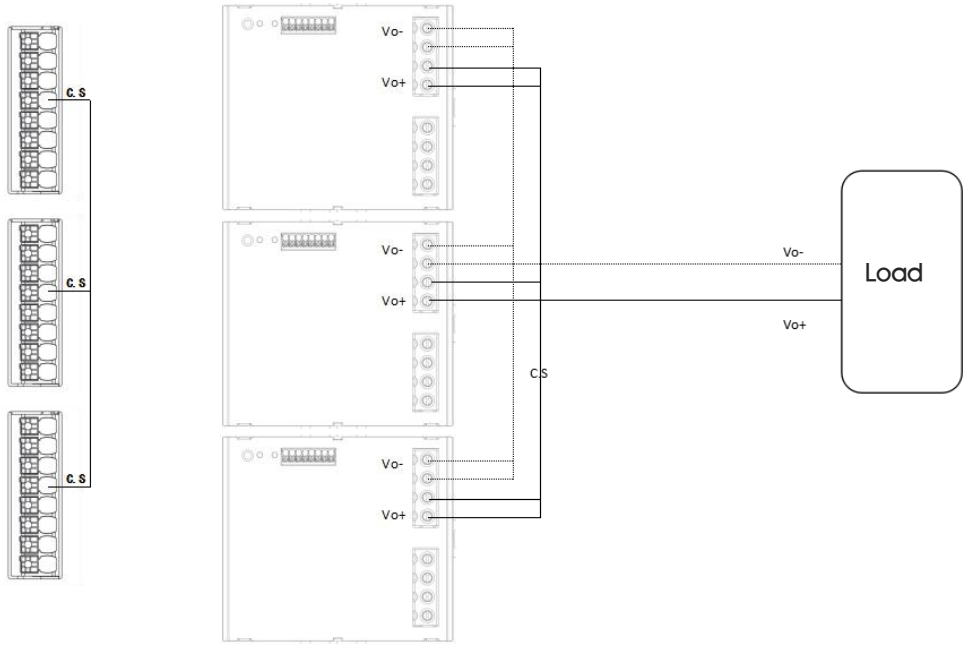

Note: 1. When used in parallel, the number of parallel modules cannot exceed 3.

2. When the power modules work in parallel, there is an active current sharing circuit inside to ensure that the current between each module remains balanced.

The active current sharing circuit adopts the automatic master-slave current sharing method. Each power supply module has a current sharing bus signal (C.S). When working in parallel, the current sharing buses of all power modules must be connected together. The current sharing bus signal is located at pin 4 of CN200.

The output voltage of each power module will affect the current sharing accuracy. The output voltage of the power module is rated voltage ±100mV. In practical applications, if the output voltage value needs to be adjusted, the output voltages of all parallel power modules need to be adjusted to the same voltage. The recommended voltage range is: target voltage value ±100mV.

After the output load of each power module is greater than 50% of the rated load, the current sharing accuracy is required to be ±5%. The calculation formula of current sharing is:

$$\text{Power supply 1's average accuracy} = \frac{Io_1 - (Io_1 + Io_2)/2}{(Io_1 + Io_2)/2} * 100\%$$

$$\text{Power supply 2's average accuracy} = \frac{Io_2 - (Io_1 + Io_2)/2}{(Io_1 + Io_2)/2} * 100\%$$

Io_1: The output current value of the power supply 1 in the parallel power module.

Io_2: The output current value of the power supply 2 in the parallel power module.

MORNSUN Guangzhou Science & Technology Co., Ltd. reserves the copyright and right of final interpretation

3.To ensure current sharing among the outputs of each power supply during parallel operation, the load lines used by the power supplies should have the same length and impedance. It is recommended that the metal material, wire diameter, length, and quantity be the same.

4.Signal lines (such as remote compensation lines, current balancing lines, etc.) should be kept away from high-interference areas/lines (such as input lines, high-current lines, motor drive lines, high-frequency lines, etc.). Special attention should be paid to avoiding crossing, to prevent signal lines from being interfered with.

2.13 RS485 Communication

LITF960-26Bxx power communication hardware circuit uses RS485 bus, the receiving and sending terminals should be consistent, in case of inconsistency, the hardware circuit should be added for level conversion.

This communication adopts the standard Modbus communication protocol, through 03H multi-register read instruction can read the power supply product information, product real-time working state, fault information and so on. Communication interface configuration requirements and related registers are defined as follows:

Baud rate: 38400Baud/S;

Data bits: 8 bits;

Starting bit: 1 bit;

Stop bit: 1 bit;

Parity bit: none;

The maximum delay between bytes within frames is 20mS. Incomplete data frames received after the delay time are discarded;

The delay time between frames should be greater than 200mS.

Register address	Parameter name	Parameter description
0-63	Product information	Product series and model information; The preceding information is character data.
71	Fault code	Bit0: output over-voltage mark (software detection)

MORNSUN Guangzhou Science & Technology Co., Ltd. reserves the copyright and right of final interpretation

			1-Indicates output over-voltage; 0-indicates normal; Bit1: output over-current flag 1-indicates that the output is over-current; 0-indicates that the output is normal; Bit7: Output over-voltage mark (hardware detection) 1-Indicates output over-voltage; 0-indicates normal.
80-81	Output information	Output voltage	The data type is a single-precision floating-point number. The data format is big-endian, and the unit is V.
82-83		Output current	The value is A single-precision floating-point number in big-endian format, unit A.
86-87		Internal temperature of equipment	The value is a single-precision floating-point number in big-endian format, and the unit is℃。

2.14 Available In 3-Phase 2-Wire Systems

This power supply can also be used for permanent operation of two-wire in a three-phase system.

When operating the two-wire in a three-phase system, the output power must be derated according to the following curve, and the input operating voltage can only operate at 340VAC-600VAC. Exceeding this derating limit for a long time will cause the power supply to overheat and shut down.

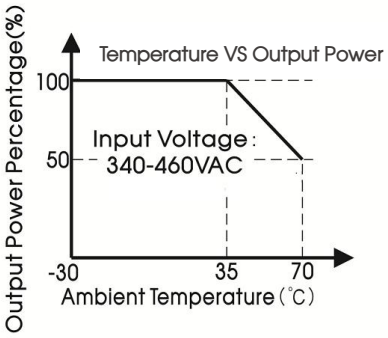

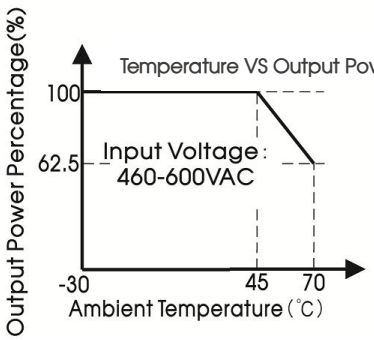

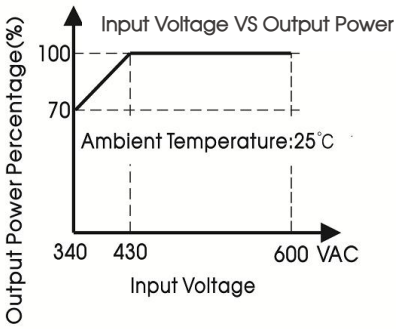

Note: Basic performance such as electromagnetic compatibility performance, hold-up time, loss and output ripple are different from three-phase operation. This working method is not covered in the certification, and operation two wires in a three-phase system does not meet the safety certification.

MORNSUN Guangzhou Science & Technology Co., Ltd. reserves the copyright and right of final interpretation

2.15 Back Voltage Load

Loads such as decelerating motors, inductors can feed voltage back into the power supply. This property is also known as feedback voltage resistance or resistance to opposing electromagnetic forces.

The power supply is resistant to voltage back into the supply by the load and will not fail regardless of whether the power supply is on or off. The function diagram as below:

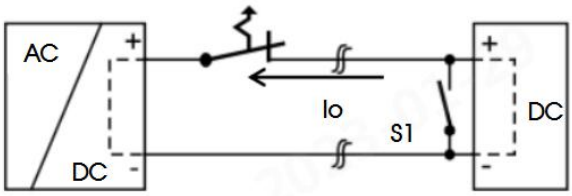

Maximum allowable feedback voltage	
Model	Maximum feedback voltage
LITF960-26B24	35VDC
LITF960-26B36	50VDC
LITF960-26B48	63VDC

3. Installation Requirements

3.1 Safety Introduction

WARNING: RISK OF ELECTRIC SHOCK DURING HIGH VOLTAGE WORKING WITH THIS EQUIPMENT

- After the power module is disconnected from the input AC or DC power, leave it for at least one minute before starting to operate it.
- When installing the input cable to the power module, first connect the ground terminal, and then connect the L1, L2 and L3 cables.
- When removing the input wire, first remove the L1 wire, L2 wire and L3 wire, and then remove the ground wire.
- When disassembling and assembling, make sure that no objects fall into the inside of the power module.
- Be careful of high temperature burns.
- After the power module works in a high temperature environment, wait for its shell to cool before operating it.

MORNSUN Guangzhou Science & Technology Co., Ltd. reserves the copyright and right of final interpretation

- This product needs to be installed by professionals and needs to be used with other equipment.

3.2 Safety Requirements

When installing, pay attention to the primary side and the protective ground. The creepage distance and electrical clearance of the primary side and the secondary side meet the safety requirements, refer to EN/UL61010.

3.3 Installation Method

Recommended installation direction: (See below: 0° Z-Axis)

Note: Pay attention to the temperature rise of the device in different installation modes. Derate the device according to the actual situation.

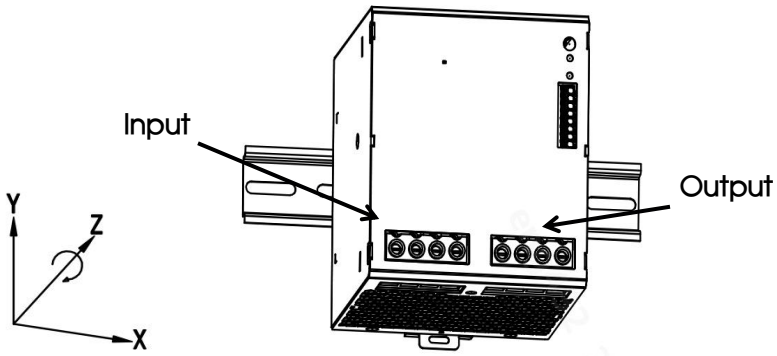

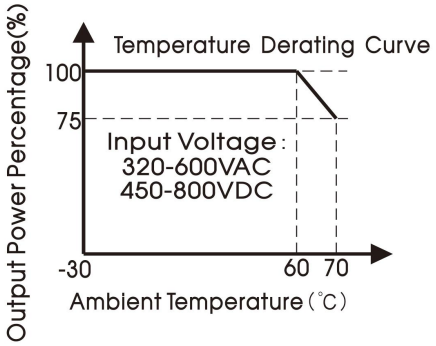

Rotate the installation position (0° Z-Axis)

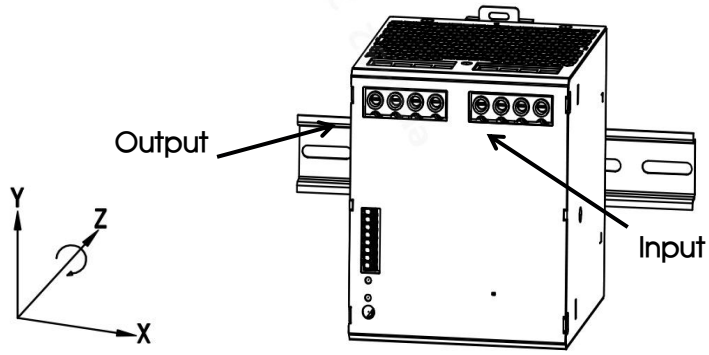

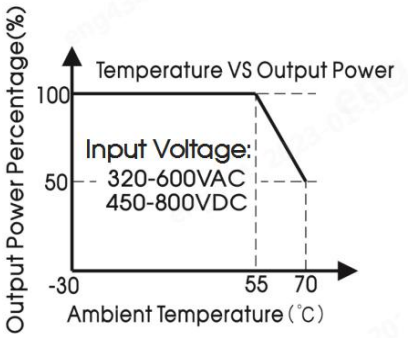

Rotate the installation position (180° Z-Axis)

MORNSUN Guangzhou Science & Technology Co., Ltd. reserves the copyright and right of final interpretation

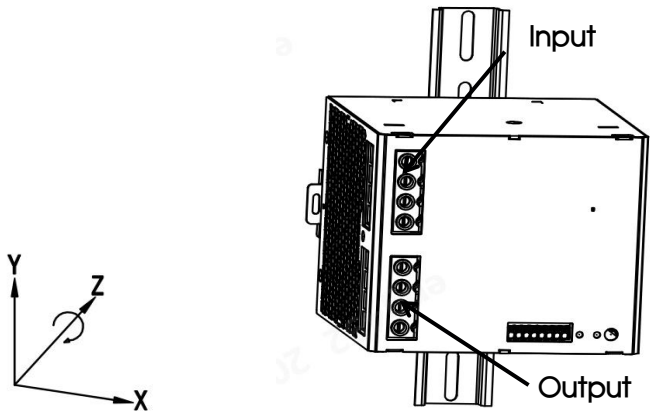

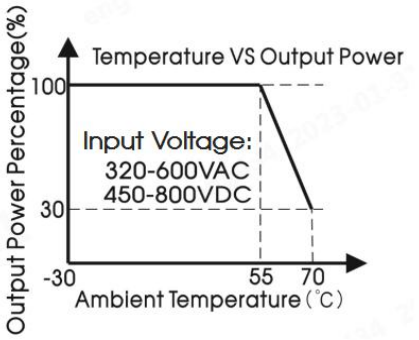

Rotate the installation position (90° Z-Axis)

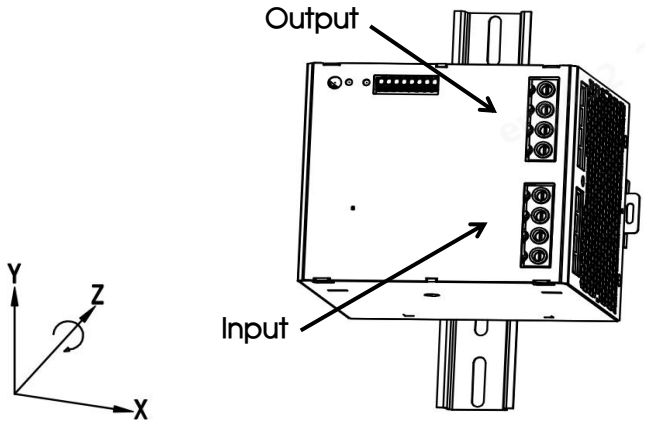

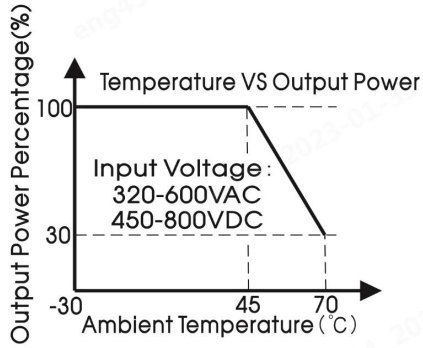

Rotate the installation position (270° Z-Axis)

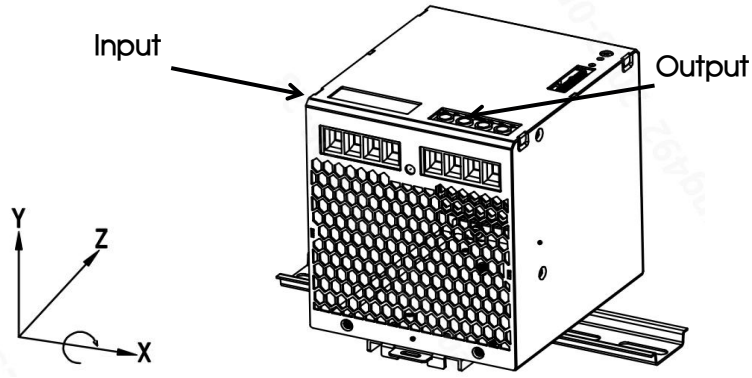

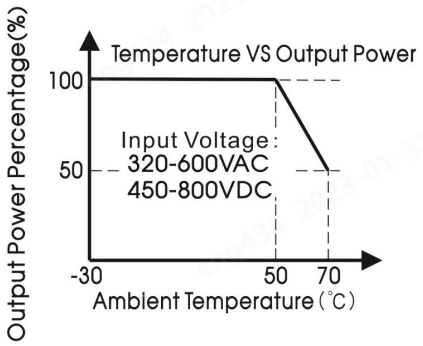

Rotate the installation position (90° X-Axis)

MORNSUN Guangzhou Science & Technology Co., Ltd. reserves the copyright and right of final interpretation

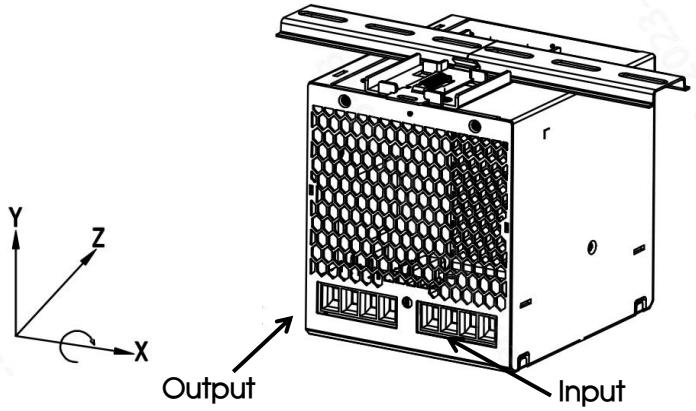

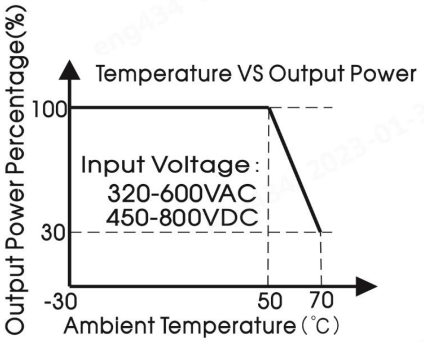

Rotate the installation position (270° X-Axis)

MORNSUN Guangzhou Science & Technology Co., Ltd. reserves the copyright and right of final interpretation