DC/DC Converter
FB0505T-1WR4

MORNSUN®

1W isolated DC-DC converter
Fixed input voltage, unregulated single output

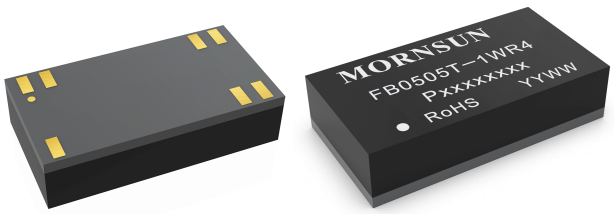

Patent Protection RoHS



Continuous Short Circuit Protection



FEATURES

- Ultra-small, ultra-thin DFN package (13.20 x 7.00 x 3.10mm)
- Isolation capacitance as low as 8pF
- I/O isolation test voltage 3000VAC/4200VDC
- Operating ambient temperature range: -40℃ to +125℃
- High efficiency up to 87%
- Continuous short-circuit protection
- Meet automotive EMC standards
- AEC-Q100 approved (under testing)

FB0505T-1WR4 is designed for use in distributed power supply systems and especially suitable in applications such as digital circuits, low frequency analog circuits, relay-driven circuits and data switching circuits. It also can be used in automobile motor control and drive system, such as motor vehicle communication system controller, engine control system, the ignition system, the motor voltage monitoring, the electronic accelerator pedal, automobile tire pressure detection system, doors and tail lights controller, air conditioning control and battery management system (BMS), etc.

Selection Guide

Certification	Part No.	Input Voltage (VDC)	Output		Full Load Efficiency (%) Min./Typ.	Capacitive Load(μF) Max.
		Nominal (Range)	Voltage (VDC)	Current(mA) Max./Min.		
--	FB0505T-1WR4	5 (4.5-5.5)	5	200/20	83/87	2400

Input Specifications

Item	Operating Conditions	Min.	Typ.	Max.	Unit
Input Current (full load / no-load)	5VDC input	--	230/7	241/15	mA
Reflected Ripple Current*		--	10	--	
Surge Voltage (1sec. max.)	5VDC input	-0.7	--	9	VDC
Input Filter		Capacitance filter			
Hot Plug		Unavailable			

Note: * Please refer to DC-DC Converter Application Note for detailed description of reflected ripple current testing method.

Output Specifications

Item	Operating Conditions	Min.	Typ.	Max.	Unit
Voltage Accuracy		See output regulation curve (Fig. 1)			
Linear Regulation	Input voltage change: ±1%	--	--	1.2	--
Load Regulation	10%-100% load	--	8	15	%
Ripple & Noise*	20MHz bandwidth	---	30	75	mVp-p
Temperature Coefficient	Full load	--	±0.02	--	%/℃
Short-circuit Protection		Continuous, self-recovery			

Note: * The "parallel cable" method is used for ripple and noise test, please refer to DC-DC Converter Application Notes for specific information.

General Specifications

Item	Operating Conditions	Min.	Typ.	Max.	Unit
Isolation	Input-output electric strength test for 1 minute with a leakage current of 1mA max.	4200	--	--	VDC
		3000	--	--	VAC
Insulation Resistance	Input-output resistance at 500VDC	1000	--	--	MΩ

MORNSUN Guangzhou Science & Technology Co., Ltd. reserves the copyright and right of final interpretation

Isolation Capacitance	Input-output capacitance at 100kHz/0.1V	--	8	--	pF
Operating Temperature	Derating when operating temperature≥105℃, (see Fig. 2)	-40	--	125	℃
Storage Temperature		-55	--	125	
Case Temperature Rise	Ta=25℃	--	7	--	
Storage Humidity	Non-condensing	--	--	95	%RH
Reflow Soldering Temperature*		Peak temp.≤245℃, maximum duration time≤60s over 217℃			
Vibration		10-1000Hz, 1mm, 10G, along X, Y and Z four cycles each			
Switching Frequency	Full load, nominal input voltage	--	300	--	kHz
MTBF	MIL-HDBK-217F@25℃	7500	--	--	k hours
Moisture Sensitivity Level (MSL)	IPC/JEDEC J-STD-020D.1	Level 3			
Note: * See also IPC/JEDEC J-STD-020D.1.					

Mechanical Specifications

Case Material	Black epoxy resin; flame-retardant and heat-resistant (UL94 V-0)
Dimensions	13.20 x 7.00 x 3.10 mm
Weight	0.7(Typ.)
Cooling Method	Free air convection

Electromagnetic Compatibility (EMC)

Emissions	CE	CISPR32/EN55032 CLASS B (see Fig. 4 for recommended circuit)
		CISPR25/EN55025 CLASS 3 (see Fig. 5 for recommended circuit)
	RE	CISPR32/EN55032 CLASS B (see Fig. 4 for recommended circuit)
		CISPR25/EN55025 CLASS 3 (see Fig. 5 for recommended circuit)
Immunity	ESD	ISO10605 Contact ±8kV perf. Criteria B
	RS	ISO11452-2 100V/m perf. Criteria A
	CS	ISO11452-4 200mA perf. Criteria A

Typical Characteristic Curves

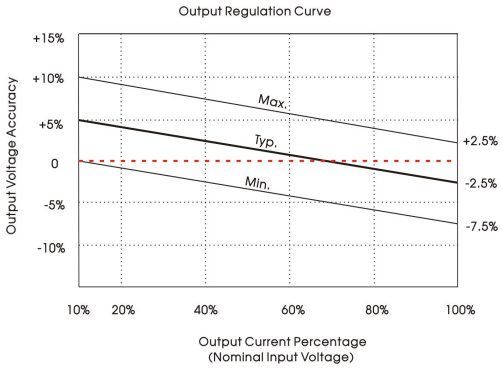

Fig. 1

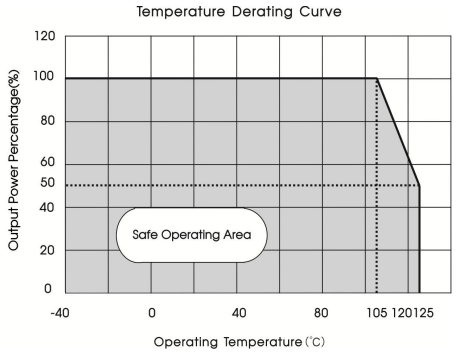

Fig. 2

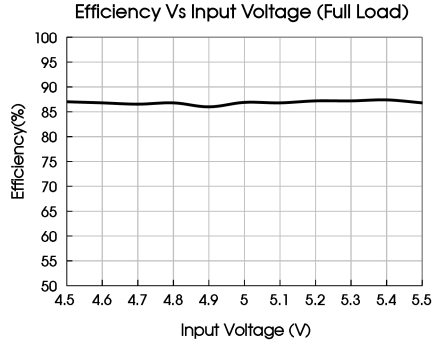

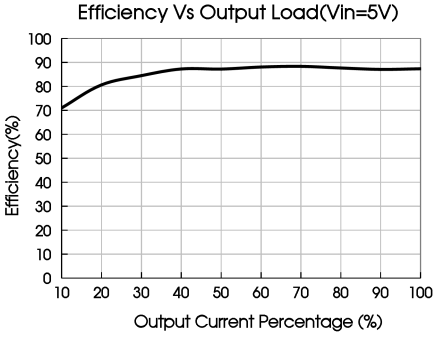

MORNSUN Guangzhou Science & Technology Co., Ltd. reserves the copyright and right of final interpretation

Design Reference

1. Typical application

Input and/or output ripple can be further reduced, by connecting a filter capacitor from the input and/or output terminals to ground as shown in Fig.3.

Choosing suitable filter capacitor values is very important for a smooth operation of the modules. For recommended input and output capacitor values refer to Table 1.



Fig.3

Table 1: Recommended input and output capacitor values

Vin	Cin	Vo	Cout
5VDC	4.7μF/25V	5VDC	10μF/25

2. EMC (CISPR32/EN55032 CLASS B) compliance circuit

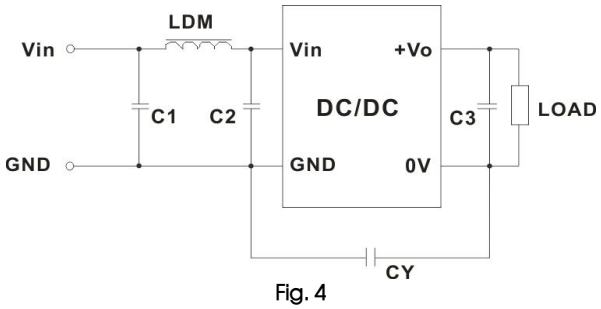

Fig. 4

Table 2: Recommended EMC filter values

Input voltage 5VDC	Output voltage		5VDC
	Emissions	C1/C2	4.7μF /25V
		CY	47pF /5kVDC
		C3	Refer to the Cout in table 1
		LDM	6.8μH

3. EMC (CISPR25/EN55025 CLASS 3) compliance circuit

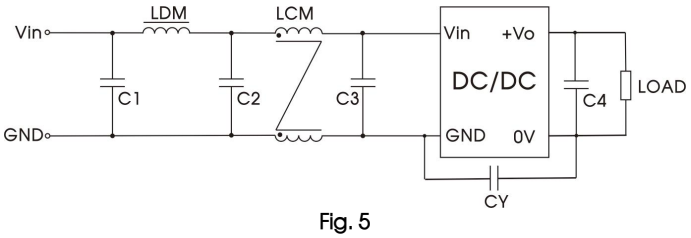

Fig. 5

Table 3: Recommended EMC filter values

Input voltage 5VDC	Output voltage		5VDC
	Emissions	C1/C2/C3	10μF /25V
		C4	Refer to the Cout in table 1
		LDM	4.7uH
		LCM	4.7mH
		CY	47pF /5kVDC

4. For additional information, please refer to DC-DC converter application notes on www.mornsun-power.com

Temperature Rise Test PCB Layout

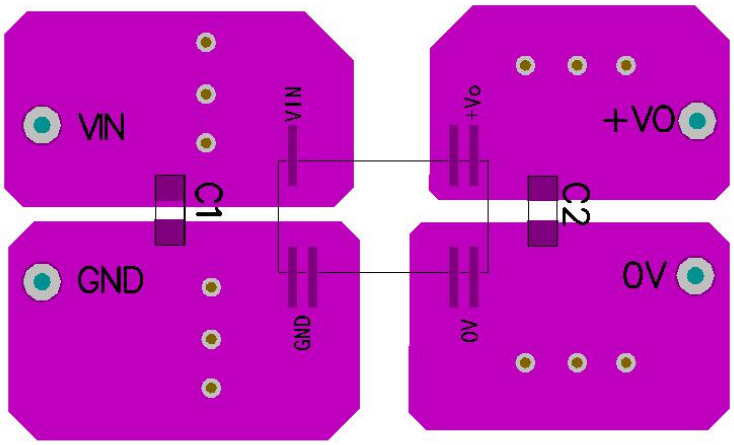

MORNSUN Guangzhou Science & Technology Co., Ltd. reserves the copyright and right of final interpretation

Dimensions and Recommended Layout

THIRD ANGLE PROJECTION

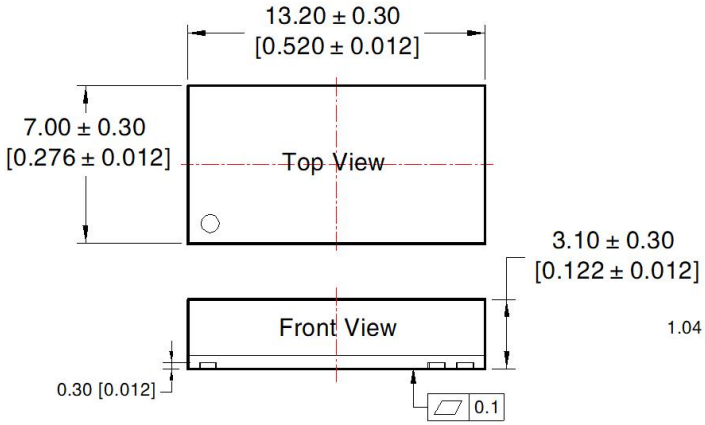

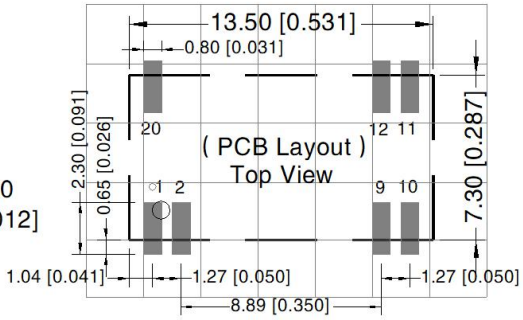

Note: Grid 2.54*2.54mm

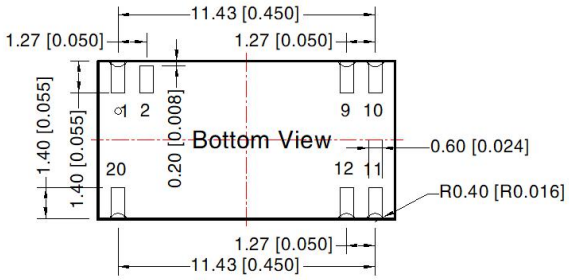

Pin-Out	
Pin	Mark
1,2	GND
9,10	0V
11,12	+Vo
20	Vin

Note:
Unit: mm[inch]
General tolerances: ± 0.10[± 0.004]

MORNSUN Guangzhou Science & Technology Co., Ltd. reserves the copyright and right of final interpretation

Tape/Reel packaging

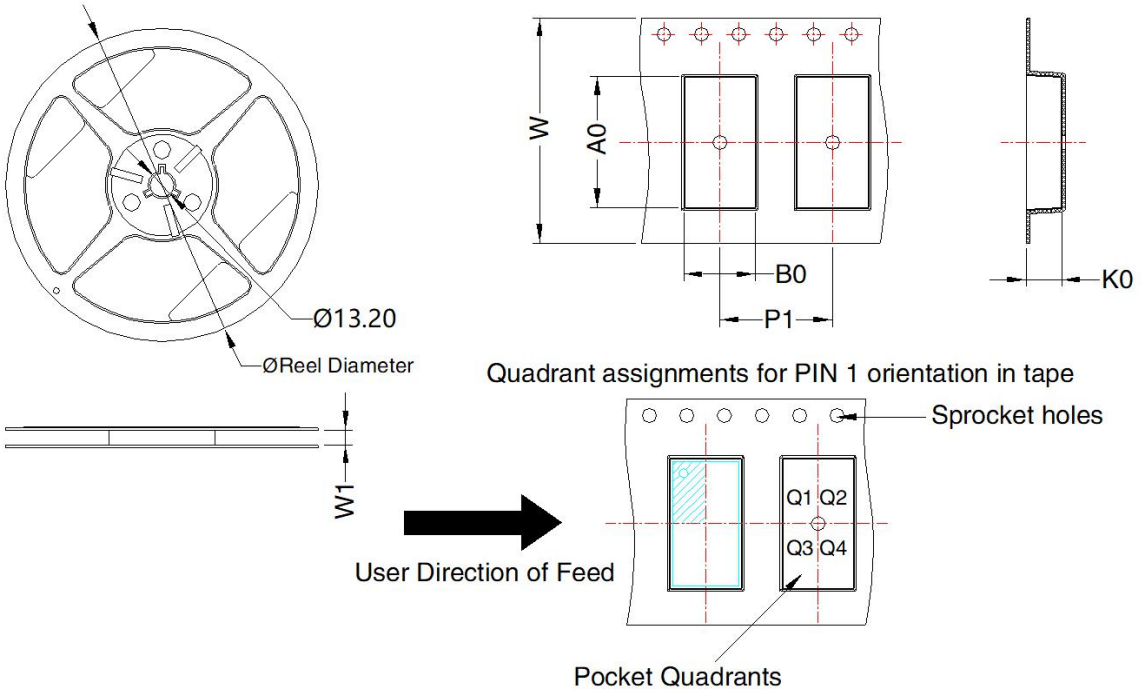

Device	Package Type	Pin	MPQ	Reel Diameter (mm)	Reel Width W1 (mm)	A0 (mm)	B0 (mm)	K0 (mm)	P1 (mm)	W (mm)	Pin1 Quadrant
FB05xxT–1WR4	DFN 7x13.2	7	350	180.0	24.4	14.05	7.75	3.8	12.0	24.0	Q1

Notes:

1. For additional information on Product Packaging please refer to www.mornsun-power.com. Tape/Reel packaging bag number: 58240038;
2. Refer to *IPC 7093* for the welding process design of this product. For detailed operation guidance, please refer to *Hot Air Gun Welding Operation Instruction for DFN Package Product* or *Welding Operation Instruction for DFN Package Product*;
3. If the product is not operated within the required load range, the product performance cannot be guaranteed to comply with all parameters in the datasheet;
4. The maximum capacitive load offered were tested at input voltage range and full load;
5. Unless otherwise specified, parameters in this datasheet were measured under the conditions of Ta=25℃, humidity<75%RH with nominal input voltage and rated output load;
6. All index testing methods in this datasheet are based on our company corporate standards;
7. We can provide product customization service, please contact our technicians directly for specific information;
8. Products are related to laws and regulations: see "Features" and "EMC";
9. Our products shall be classified according to ISO14001 and related environmental laws and regulations, and shall be handled by qualified units.

MORNSUN Guangzhou Science & Technology Co., Ltd.
Address: No. 8 Nanyun 4th Road, Huangpu District, Guangzhou, China
Tel: 86-20-38601850 Fax: 86-20-38601272 E-mail: info@mornsun.cn www.mornsun-power.com

MORNSUN Guangzhou Science & Technology Co., Ltd. reserves the copyright and right of final interpretation