0.5W isolated DC-DC converter
Fixed input voltage, regulated single output



RoHS

Continuous Short Circuit Protection

3 years Warranty

FEATURES

- I/O isolation test voltage 5kVAC
- Reinforced insulation
- Operating ambient temperature range: -40℃ to +125℃
- Adjustable output voltage: 3.3V, 3.7V, 5.0V, 5.4V
- High CMTI: ±150kV/us
- SOIC16 package
- Integrated soft-start, over-temperature protection, input under-voltage protection and continuous short-circuit protection

B0505ST16-W5R5S meets reinforced insulation requirements. It is specially designed for applications where require compact size, high isolation, low isolation capacitor and low leakage current power. It is suitable for:
1.Where the voltage of the input power supply is stable (voltage variation: ±10%Vin);
2.Where isolation is necessary between input and output (isolation voltage ≤5k VAC);
Such as, medical collection and isolation, High voltage collection circuit, IGBT driven circuits, automobile motor control etc.

Selection Guide

Certification	Part No.	Input Voltage(VDC)	Output		Full Load Efficiency(%) Min./Typ.	Capacitive Load(uF)
		Nominal (Range)	Voltage*(VDC)	Current (mA) Max./Min.		
--	B0505ST16-W5R5S	3.3 (2.97-3.63)	3.3	91/9	45/49	2200
		5 (4.5-5.5)	3.3	150/15	48/52	
			3.7	135/14	48/52	
			5.0	100/10	54/58	
			5.4	92/9	54/58	

Note: *B0505ST16-W5R5S adjustable output voltage via Trim pin:
1.When Trim is shorted to Vo, the output voltage is 5V;
2.When Trim is shorted to Vo through 100kΩ, the output voltage is 5.4V;
3.When Trim is shorted to 0V, the output voltage is 3.3V;
2.When Trim is shorted to 0V through 100kΩ, the output voltage is 3.7V.

Input Specifications

Item	Operating Conditions		Min.	Typ.	Max.	Unit
Input Current (full load / no-load)	3.3VDC 输入	3.3 VDC 输出	--	185/5	--/10	mA
	5 VDC 输入	3.3 VDC 输出	--	192/5	--/10	
		3.7 VDC 输出	--	192/5	--/10	
		5.0 VDC 输出	--	178/5	--/10	
		5.4 VDC 输出	--	178/5	--/10	
Hot Plug			Unavailable			
Ctrl	Module on		Connect with high level(0.55Vin-Vin)			
	Module off		Connect GND or float or low-level Voltage(0-0.3Vin)			
	Input current when off		--	--	100	uA
Input Under-voltage Protection	Under-voltage protection threshold during input rising		--	--	2.8	V
	Under-voltage protection threshold during input falling		2.1	--	--	
	Under-voltage protection hysteresis voltage		--	0.7	--	

MORNSUN Guangzhou Science & Technology Co., Ltd. reserves the copyright and right of final interpretation

Output Specifications

Item	Operating Conditions	Min.	Typ.	Max.	Unit
Voltage Accuracy	100% load	--	±1	±3	%
Linear Regulation	Input voltage change: ±10%	--	--	±0.2	
Load Regulation	10%-100% load	--	±1	±2	%
Ripple & Noise*	20MHz bandwidth, 100% load	--	55	100	mVp-p
Transient Response Deviation	Nominal input voltage, 10%-90% load step change	--	--	100	mV
Transient Recovery Time		--	--	0.5	ms
Thermal shutdown Temp	Junction Temperature	150	--	170	℃
Short-circuit Protection		Continuous, self-recovery			

Note:* The "parallel cable" method is used for Ripple and Noise test, please refer to DC-DC Converter Application Notes for specific information.

General Specifications

Item	Operating Conditions	Min.	Typ.	Max.	Unit
Operating Temperature	See Fig.1	-40	--	125	℃
Storage Temperature		-65	--	150	
Storage Humidity	Non-condensing	5	--	95	%RH
Reflow Soldering Temperature*		Peak temp.Tc≤260℃, duration time 60s~150s over 217℃. refer to IPC/JEDEC J-STD-020D.1 standard for actual applications.			
Moisture Sensitivity Level (MSL)	IPC/JEDEC J-STD-020D.1	MSL 3			
Switching Frequency		--	40	--	MHz
MTBF	MIL-HDBK-217F@25℃	36600	--	--	k hours

Isolation Specifications

Item	Operating Conditions	Min.	Typ.	Max.	Unit
External Clearance	Measure the shortest space distance from the input to output	8	--	--	mm
External Creepage	Measure the shortest physical distance from the input to output	8	--	--	mm
CMTI	Input(pin1-8) - output(pin9-16), VCM=1200V_{RMS}	±150	--	--	kV/us
Isolation Capacitance	Input(pin1-8) - output(pin9-16) capacitance at 100kHz/1V	--	3.5	--	pF
Insulation Resistance	Input(pin1-8) - output(pin9-16) resistance at 500VDC	1000	--	--	MΩ
isolation Voltage	Input(pin1-8) - output(pin9-16) electric strength test for 1 minute, Leakage current less than 1mA	5000	--	--	VAC

Mechanical Specifications

Case Material	Black epoxy resin; flame-retardant and heat-resistant
Dimensions	10.3 x 10.3 x 2.5mm
Weight	0.35 g(Typ.)
Cooling Method	Free air convection

Electromagnetic Compatibility (EMC)

Emissions	CE	CISPR32/EN55032 CLASS B (see Fig. 3 for recommended circuit)
	RE	CISPR32/EN55032 CLASS B (see Fig. 3 for recommended circuit)
Immunity	ESD	IEC/EN61000-4-2 Air ±12kV, Contact ±8kV perf. Criteria B

MORNSUN Guangzhou Science & Technology Co., Ltd. reserves the copyright and right of final interpretation

Typical Characteristic Curves

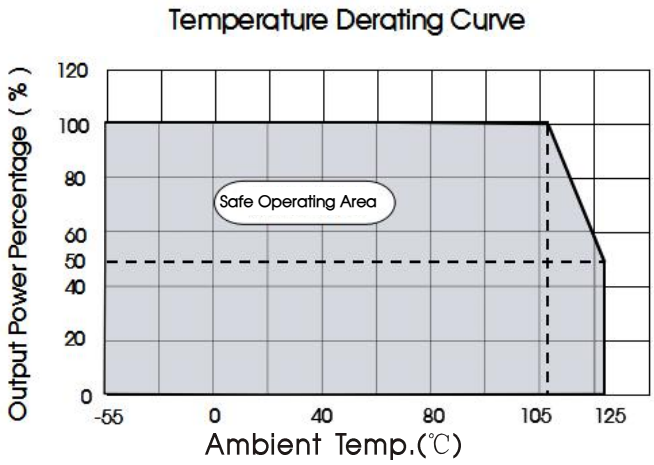

Figure 1

Design Reference

1. Typical application

Typical application shown in Fig. 2, and Input/Output capacitor(necessary) values shown in Table 1,

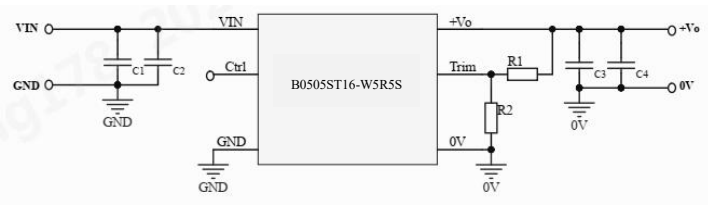

Figure 2

Output Voltage	R1	R2	C1/C4	C2/C3
3.3V	--	0Ω	10uF/16V	0.1uF/16V
3.7V	--	100kΩ		
5.0V	0Ω	--		
5.4V	100kΩ	--		

Table1

Note: ① Trim dangling is not supported.

② If there is a voltage spike in the input Vin, it is recommended that C1 use a 1206 packaged ceramic capacitor.

2. EMC compliance circuit

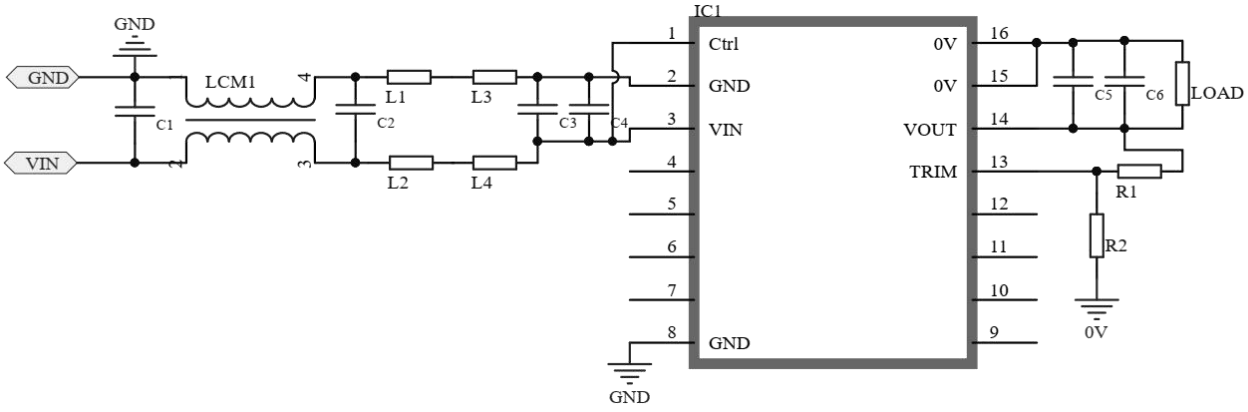

Figure 3 EMI Recommended circuit

C1/C2/C3/C6	LCM1	C4/C5	L1/L2/L3/L4 (Surface Mount Ferrite Bead)
10uF/16V	FL2D-Z5-080	0.1uF/16V	2kΩ@100MHz, 500mA (GZ2012D202TF)

MORNSUN Guangzhou Science & Technology Co., Ltd. reserves the copyright and right of final interpretation

3. PCB Design Instructions:

3.1 The decoupling capacitors and energy storage capacitors of VIN and GND, VO and 0V should be placed as close to the chip pins as possible to reduce the loop area and the parasitic inductance of PCB traces. Generally, it should be controlled within 2mm. Placing the decoupling capacitor more closer to the chip, as shown below.

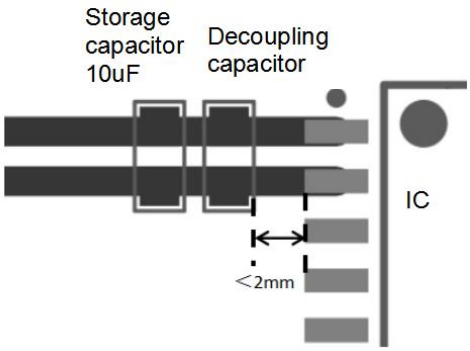

Recommended

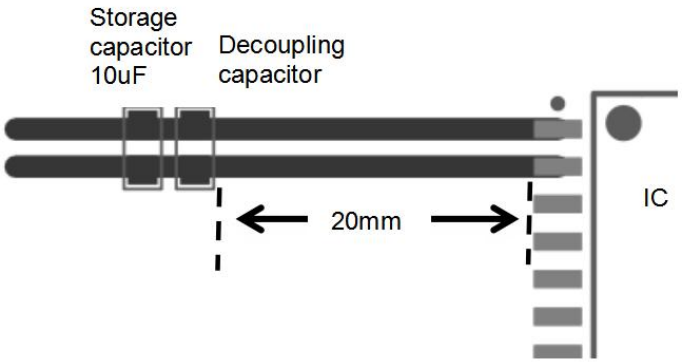

Not recommended

3.2 The power line width should be designed at least 0.5mm when wiring.

3.3 When it is required to place vias in the power supply line and the ground line, the position of the via should be on the outside of the capacitor relative to the chip pins, rather than between the capacitor and the chip, as shown in the figure below, to reduce the parasitic inductance of the via Impact.

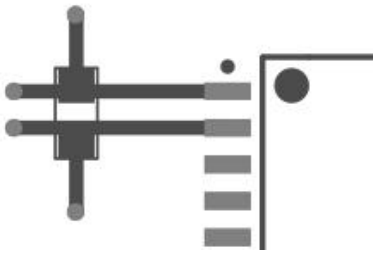

Recommended

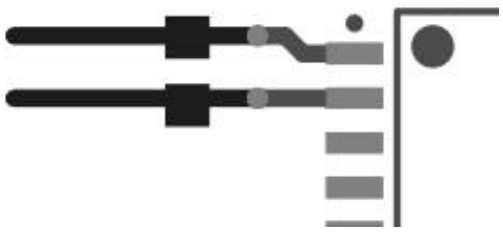

Not recommended

MORNSUN Guangzhou Science & Technology Co., Ltd. reserves the copyright and right of final interpretation

Dimensions and Recommended Layout

THIRD ANGLE PROJECTION

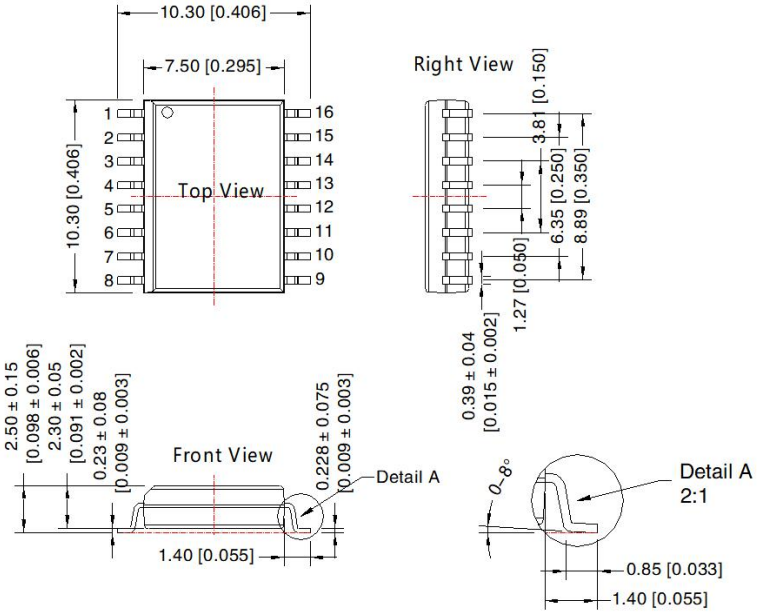

Note:
Unit: mm[inch]
General tolerances: ±0.20[±0.008

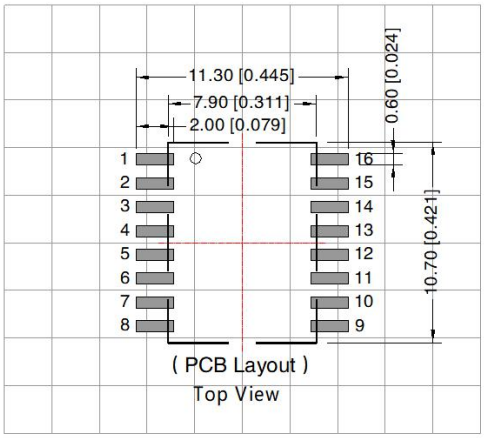

Note：Grid 2.54*2.54mm

Pin-Out			
Pin	Mark	Pin	Mark
1	Ctrl	16	0V
2	GND	15	0V
3	Vin	14	Vo
4	NC	13	Trim
5	NC	12	NC
6	NC	11	NC
7	NC	10	NC
8	NC	9	0V

MORNSUN Guangzhou Science & Technology Co., Ltd. reserves the copyright and right of final interpretation

Tape/Reel packaging

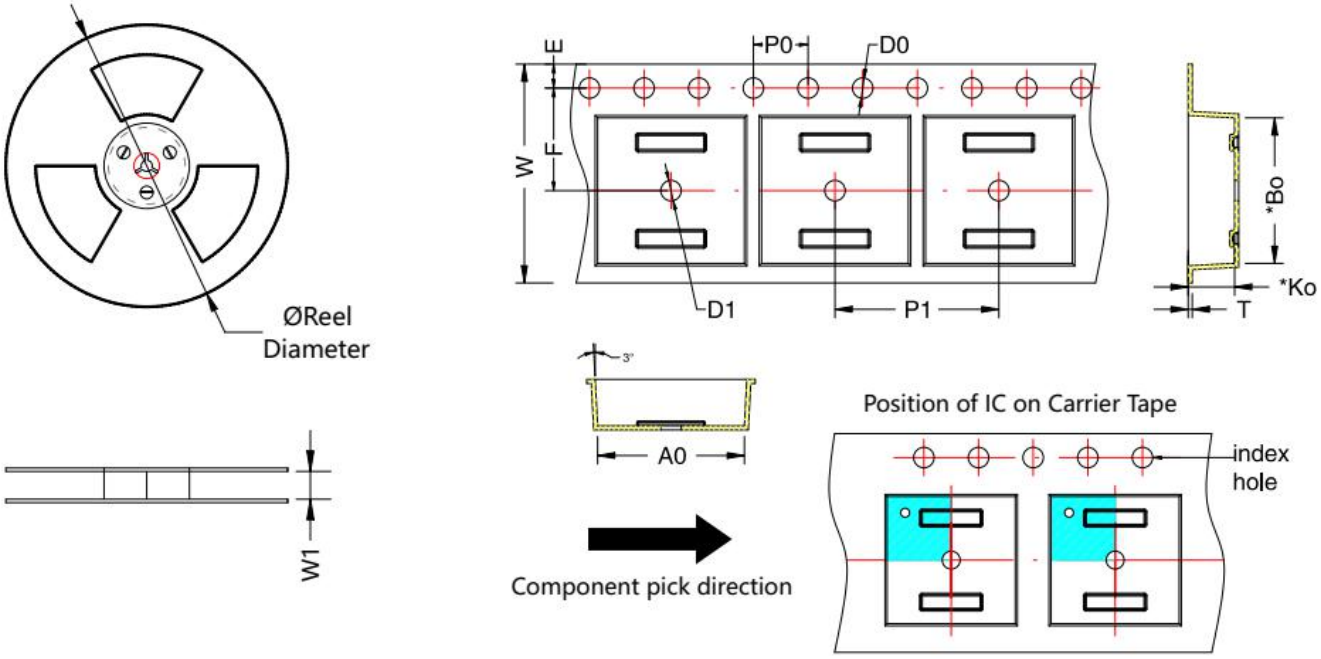

Device	Package Type	MPQ	Reel Diameter (mm)	Reel Width W1 (mm)	A0 (mm)	B0 (mm)	K0 (mm)	T (mm)	W (mm)	E (mm)	F (mm)	P1 (mm)	P0 (mm)	D0 (mm)	D1 (mm)
B0505ST16-W5R5S	SOIC-16	1000	330	16.4	10.76±0.1	10.66±0.1	3.40±0.1	0.3±0.05	16.0±0.3	1.75±0.1	7.5±0.1	12.0±0.2	4.0±0.1	1.5±0.1	1.5±0.1

Notes:

1. For additional information on Product Packaging please refer to www.mornsun-power.com. Packaging bag number: 58240137;
2. If the product is not operated within the required load range, the product performance cannot be guaranteed to comply with all parameters in the datasheet;
3. The maximum capacitive load offered were tested at input voltage range and full load;
4. Unless otherwise specified, parameters in this datasheet were measured under the conditions of Ta=25℃, humidity<75%RH with nominal input voltage and rated output load;
5. All index testing methods in this datasheet are based on our company corporate standards;
6. We can provide product customization service, please contact our technicians directly for specific information;
7. Products are related to laws and regulations: see "Features" and "EMC";
8. Our products shall be classified according to ISO14001 and related environmental laws and regulations, and shall be handled by qualified units.

MORNSUN Guangzhou Science & Technology Co., Ltd.
Address: No. 8 Nanyun 4th Road, Huangpu District, Guangzhou, China
Tel: 86-20-38601850 Fax: 86-20-38601272 E-mail: info@mornsun.cn www.mornsun-power.com

MORNSUN Guangzhou Science & Technology Co., Ltd. reserves the copyright and right of final interpretation