960W AC/DC Economical Ultra Slim Industrial DIN Rail Power XDR-960E series

User's Manual
Scan or Click



LISTED UL61010 | BS EN/EN62368-1 BS EN/EN61558-1 BS EN/EN61010-1 | IEC62368-1 IEC61558-1 IEC61010-1 | (Note.7) | IS 13252 (By request Note.8) | KC62368-1 (By request)

CNS15598-1 | GB4943.1 | TPTC004

Automate | Industrial | Security | Network | Telecom

Features

- 180~264Vac input with PFC
- Global certificates in multi-fields (ITE 62368-1,Industrial 61558-1/-2-16,61010)
- 96mm slim width
- High efficiency up to 95.5% and no load power dissipation 3.9W
- Built-in constant current limiting circuit
- Current sharing up to 3840W (3+1) for parallel use
- Protections: Short circuit / Overload / Over voltage / Over temperature
- Fanless design, cooling by free air convection
- Over voltage category III (OVC III)
- -40~+70°C wide range operation temperature (>+50℃ derating)
- Operating altitude up to 5000 meters
- Built-in DC OK relay contact
- Can be installed on DIN rail TS-35/7.5 or 15
- 3 years warranty

Applications

- Industrial control system
- Semiconductor fabrication equipment
- Factory automation
- Electro-mechanical apparatus
- Battery charger

GTIN CODE

MW Search: https://www.meanwell.com/serviceGTIN.aspx

Description

The XDR-960E series is a 960W AC/DC economical ultra slim industrial DIN rail power. Key features of this series include a narrow 96mm casing, optimizing system installation space. It boasts a maximum efficiency of 95.5% and a low standby power consumption 3.9W for energy savings and carbon reduction. It has built-in constant current, fanless design, a wide operating temperature range of -40 to +70℃ (up to +50℃ at full load); OVCIII compliance; parallel function capability up to 3840W; built-in DC OK signal. With comprehensive protection functions, complete safety certifications, and a 3-years warranty, the XDR-960E series is a compact, high-performance, and highly reliable DIN rail power supply.

Model Encoding

XDR - 960E - 24

- 24 — Output voltage(24V/36V/48V)
- E — Economical version
- 960 — Output wattage
- XDR — Series name

960W AC/DC Economical Ultra Slim Industrial DIN Rail Power XDR-960E series

SPECIFICATION	XDR-960E-24	XDR-960E-36	XDR-960E-48
OUTPUT			
DC VOLTAGE	24V	36V	48V
RATED CURRENT	40A	26.6A	20A
CURRENT RANGE	0 ~ 40A	0 ~ 26.6A	0 ~ 20A
RATED POWER	960W	957.6W	960W
RIPPLE & NOISE (max.) Note.2	120mVp-p	150mVp-p	150mVp-p
VOLTAGE ADJ. RANGE	24 ~ 29V	36 ~ 42V	48 ~ 55V
VOLTAGE TOLERANCE Note.3	±1.0%	±1.0%	±1.0%
LINE REGULATION	±0.5%	±0.5%	±0.5%
LOAD REGULATION	±1.0%	±1.0%	±1.0%
SETUP, RISE TIME	500ms, 50ms/230Vac at full load		
HOLD UP TIME (Typ.)	15ms/230Vac at full load		
INPUT			
AC VOLTAGE RANGE	180 ~ 264Vac		
DC VOLTAGE RANGE	254.5 ~ 370Vdc		
NO LOAD POWER CONSUMPTION (Typ.)	3.9W @ 230Vac		
FREQUENCY RANGE	47 ~ 63Hz		
POWDR FACTOR (Typ.)	PF>0.95/230Vac at full load		
EFFICIENCY (Typ.)	94.5%	95%	95.5%
AC CURRENT (Typ.)	5A/230Vac		
INRUSH CURRENT (Typ.)	COLD START 30A/230Vac		
LEAKAGE CURRENT	<3.5mA / 240Vac		
PROTECTION			
OVERLOAD	105~130% rated output power		
	Hiccup mode when output voltage <50%, recovers automatically after fault condition is removed Constant current limiting without shutdown within 50%~100% rated output voltage, recovers automatically after fault condition is removed		
OVER VOLTAGE	30 ~ 34V	43 ~ 50V	56 ~ 65V
	Protection type : Shut down o/p voltage, re-power on to recover		
OVER TEMPERATURE	Protection type : Shut down o/p voltage, recovers automatically after temperature goes down		
FUNCTION			
PARALLEL(Droop Mode)	Up to 3840W or (3+1) units;Please refer to Function Manual for more details		
DC OK RELAY CONTACT	Relay Contact Ratings (max.):30Vdc/1A, 30Vac/0.5A resistive load		
ENVIRONMENT			
WORKING TEMP.	-40 ~ +70℃ (Refer to "Derating Curve")		
WORKING HUMIDITY	20 ~ 95% RH non-condensing		
STORAGE TEMP., HUMIDITY	-40 ~ +85℃, 10 ~ 95% RH non-condensing		
TEMP. COEFFICIENT	±0.03% /℃ (0 ~ 50℃)		
VIBRATION	Component:10 ~ 500Hz, 2G 10min./1cycle, 60min. each along X, Y, Z axes; Mounting: Compliance to IEC60068-2-6		

960W AC/DC Economical Ultra Slim Industrial DIN Rail Power XDR-960E series

SPECIFICATION	XDR-960E-24	XDR-960E-36	XDR-960E-48
SAFETY & EMC Note.6&7&8			
SAFETY STANDARDS	CB IEC 62368-1, IEC 61558-1/2-16, IEC 61010-1/-2-201 TUV BS EN/EN 62368-1, BS EN /EN 61558-1/-2-16, BS EN/EN 61010-1/-2-201 UL UL/CUL 61010-1/-2-201 CCC GB4943.1 BSMI CNS15598-1 EAC TPTC004 approved KC/BIS KC 62368-1 and BIS IS 13252 (Part 1) certified, No stock ,contact sales by request		
OVER VOLTAGE CATEGORY Note.4	IEC/EN 61558-1/-2-16 (OVC Ⅲ, altitude up to 2000m) IEC/EN/UL 61010-1/-2-201 (OVC Ⅱ, altitude up to 5000m) IEC/EN 62368-1 (OVC Ⅱ, altitude up to 5000m)		
SAFETY EXTRA-LOW VOLTAGE(SELV)	IEC/EN 61558-2-16 (SELV) IEC/EN 62368-1 (SELV / ES1)		
WITHSTAND VOLTAGE	I/P-O/P: 4KVac I/P-FG: 2KVac O/P-FG: 1.5KVac O/P-DC OK: 0.5KVac		
ISOLATION RESISTANCE	I/P-O/P, I/P-FG, O/P-FG: 100M Ohms/500Vdc/25℃/ 70%RH		
EMC EMISSION	**Parameter**	**Standard**	**Test Level / Note**
	Conducted	BS EN/EN55032 (CISPR32) / BS EN/EN61204-3 / CNS15936 / KS C 9832	Class B
	Radiated	BS EN/EN55032 (CISPR32) / BS EN/EN61204-3 / CNS15936 / KS C 9832	Class B
	Harmonic Current	BS EN/EN61000-3-2	Class A
	Voltage Flicker	BS EN/EN61000-3-3	-----
EMC IMMUNITY	BS EN/EN55035 , BS EN/EN61204-3, BS EN/EN61000-6-2(BS EN/EN50082-2), KS C 9835		
	Parameter	**Standard**	**Test Level / Note**
	ESD	BS EN/EN61000-4-2	Level 3, 8KV air ; Level 2, 4KV contact; criteria A
	Radiated	BS EN/EN61000-4-3	Level 3, 10V/m ; criteria A
	EFT / Burst	BS EN/EN61000-4-4	Level 3, 2KV ; criteria A
	Surge	BS EN/EN61000-4-5	Level 4, 2KV/Line-Line ;Level 4, 4KV/Line-Line-Chassis ;criteria A
	Conducted	BS EN/EN61000-4-6	Level 3, 10V ; criteria A
	Magnetic Field	BS EN/EN61000-4-8	Level 4, 30A/m ; criteria A
OTHERS			
MTBF	1147.2K hrs min. Telcordia SR-332 (Bellcore) ; 169.9K hrs min. MIL-HDBK-217F (25℃)		
DIMENSION	96*125.2*132mm (W*H*D)		
PACKING	1.93Kg; 6pcs/12.55Kg/1.47CUFT		

NOTE

1. All parameters NOT specially mentioned are measured at 230Vac input, rated load and 25℃ of ambient temperature.
2. Ripple & noise are measured at 20MHz of bandwidth by using a 12" twisted pair-wire terminated with a 0.1 μF & 47 μF parallel capacitor.
3. Tolerance : includes set up tolerance, line regulation and load regulation.
4. The ambient temperature derating of 3.5℃/1000m with fanless models and of 5℃/1000m with fan models for operating altitude higher than 2000m(6500ft).
5. Installation clearances : 40mm on top, 20mm on the bottom, 5mm on the left and right side are recommended when loaded permanently with full power. In case the adjacent device is a heat source, 15mm clearance is recommended.
6. The power supply is considered a component which will be installed into a final equipment. The final equipment must be re-confirmed that it still meets EMC directives. (as available on https://www.meanwell.com//Upload/PDF/EMI_statement_en.pdf)
7. The Regulatory Compliance Mark (RCM) is applied on a voluntary basis. The equipment meets the relevant IEC or AS/NZS standards, or AS/NZS 3820 where applicable. The use of the RCM mark complies with AS/NZS 4417.1.
8. Some factory or model may not have the BIS logo, please contact your MEAN WELL sales for more information.

※ Product Liability Disclaimer：For detailed information, please refer to https://www.meanwell.com/serviceDisclaimer.aspx

■ Block Diagram

PFC fosc : 65KHz
PWM fosc : 60KHz

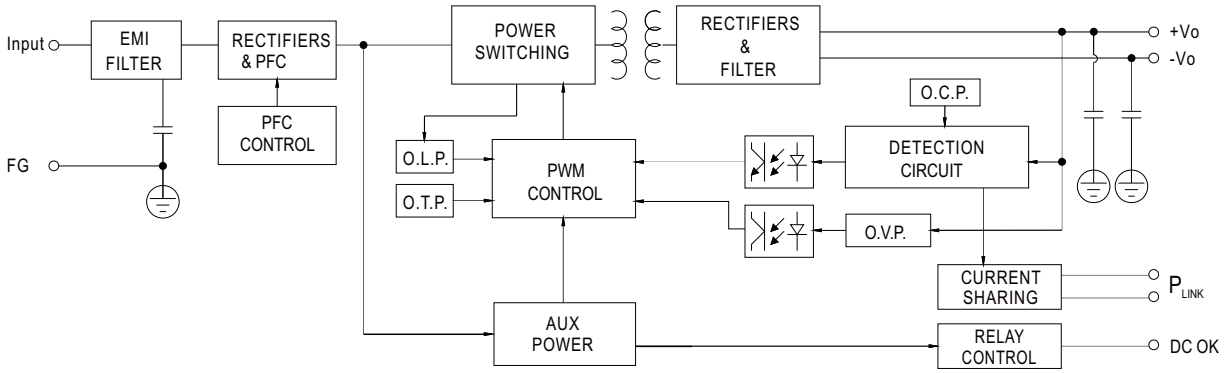

■ Derating Curve

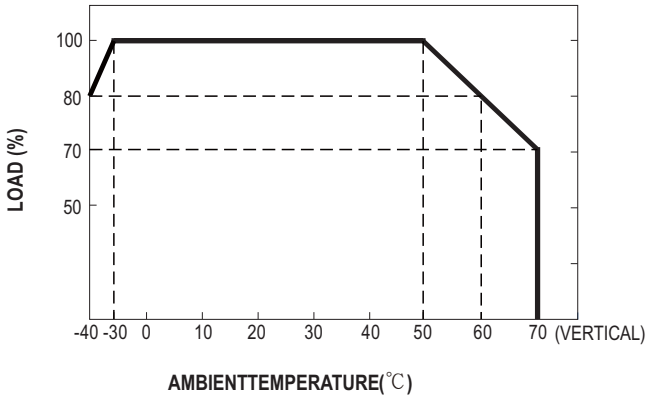

■ Static Characteristics

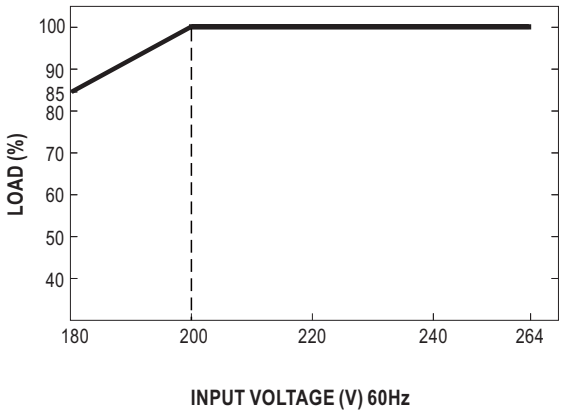

■ Function Manual

Pin No.	Function	Description
1,2	DC OK Relay Contact	Contact Close: PSU turns ON/DC_OK Contact Open: PSU turns OFF/DC_fail
3,4	Paraller Use Link(P_{LINK})	P_{LINK} should be short to enable droop parallel use.(Default disable)

1.DC OK Relay Contact

Contact Close	PSU turns ON/DC OK.
Contact Open	PSU turns OFF/DC Fail.
Contact Ratings (max.)	30Vdc/1A, 30Vac/0.5A resistive load.

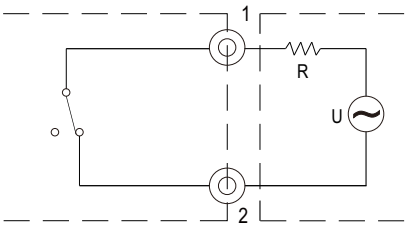

External voltage source (U) and resistor (R)
(The max. Sink is 30Vdc/1A ,30Vac/0.5A)

Internal circuit of DC_OK, via relay contact

2.Parallel Use

XDR-960E has the built-in droop mode current sharing function and can be connected in parallel, up to 4 units, to provide higher output power as exhibited below :

(1) Difference of output voltages among parallel units should be less than 0.1V.
(2) The total output current must not exceed the value determined by the following equation (Output current at parallel operation)=(The rated current per unit) x (Number of unit) x 0.9.
(3) In parallel operation 4 units is the maximum, please consult the manufacture for other applications.
(4) The power supplies should be paralleled using short and large diameter wiring and then connected to the load.
(5) When in parallel operation, the minimum output load should be greater than 7% of total output load. (Min. load >7% rated current per unit x number of unit)
(6) In parallel connection, maybe only one unit (master) operate if the total output load is less than 7% of rated load condition.
The other PSUs (slaves) may go into standby mode and their output LEDs & relays will not turn on.
(7) P_{LINK} lines should be shorted locally.
(8) In parallel operation,after overload or short circuit fault occurs, re-power on to recover.
(8) The “Parallel Use” mode regulates the output voltage in such a manner that the voltage at no load is approx. 4% higher than at normal load.

For example XDR-960E-24:
No load output voltage=24V
Normal load output current=40A
0~100% load output voltage=24V~23V

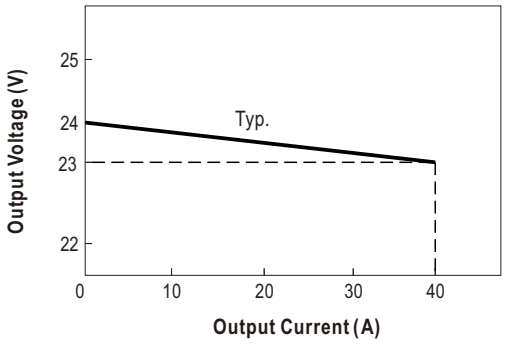

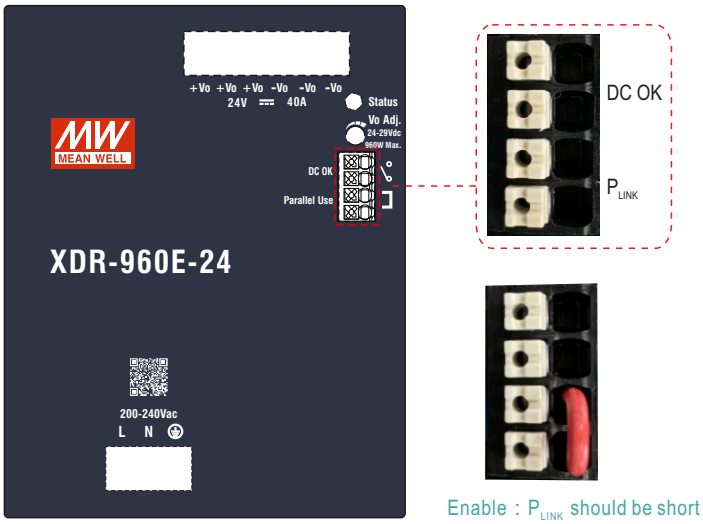

Enable : P_{LINK} should be short

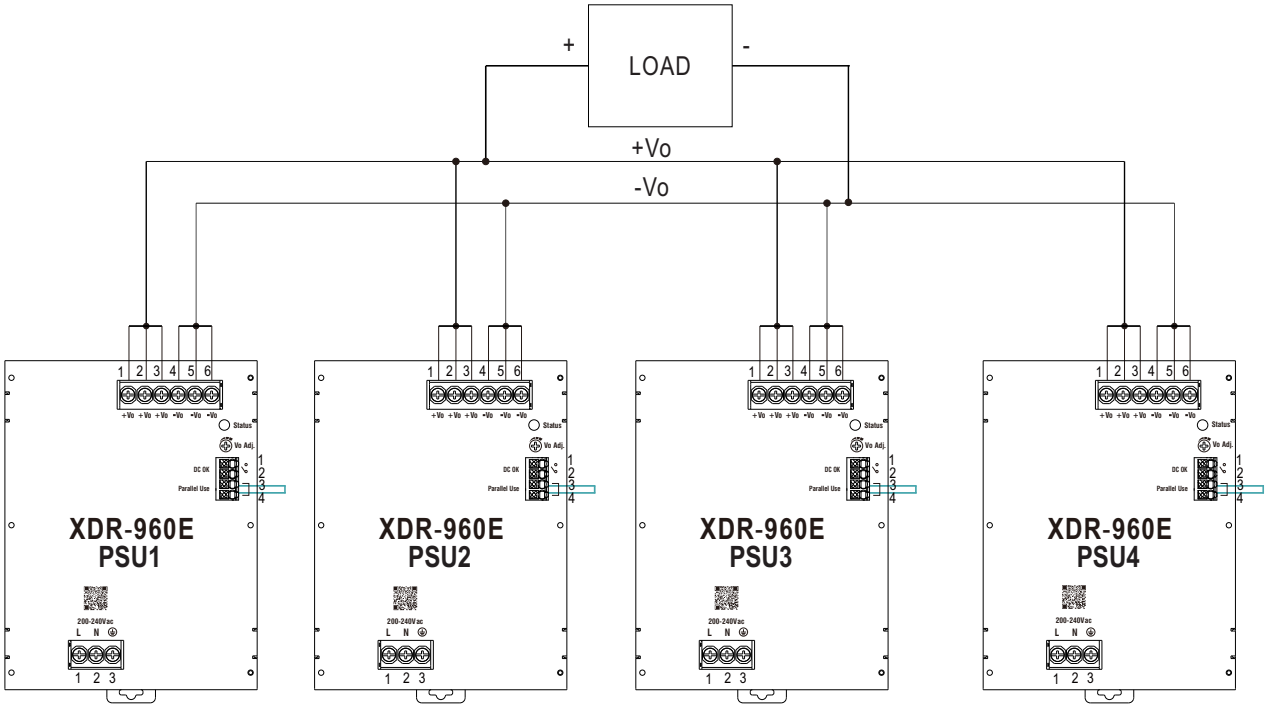

※ Please contact MEAN WELL for more details.

■ Mechanical Specification

(Unit:mm , Tolerance ±1mm)

Case No. 304

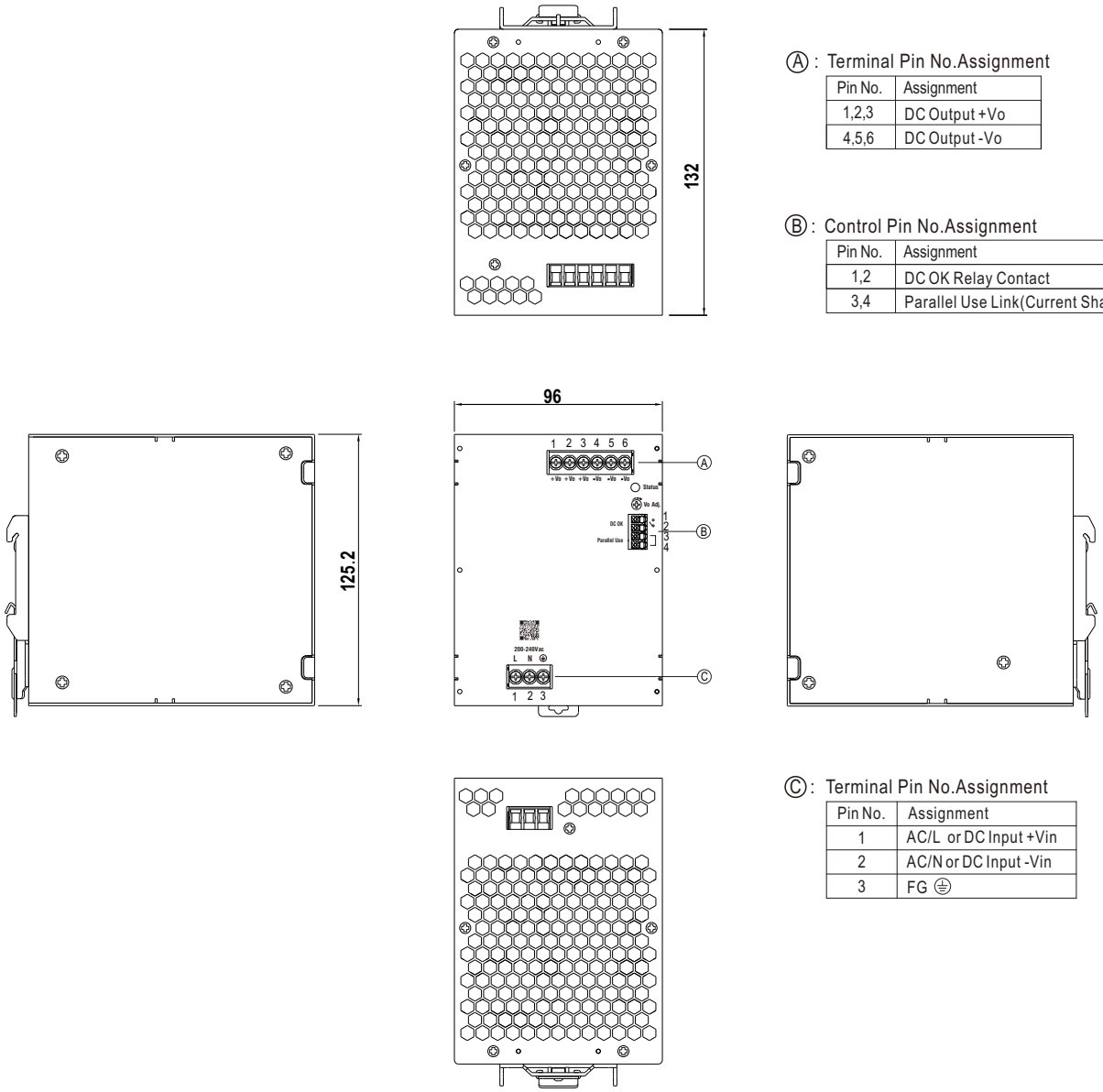

Ⓐ : Terminal Pin No.Assignment

Pin No.	Assignment
1,2,3	DC Output +Vo
4,5,6	DC Output -Vo

Ⓑ : Control Pin No.Assignment

Pin No.	Assignment
1,2	DC OK Relay Contact
3,4	Parallel Use Link(Current Sharing)

Ⓒ : Terminal Pin No.Assignment

Pin No.	Assignment
1	AC/L or DC Input +Vin
2	AC/N or DC Input -Vin
3	FG ⏚

■ Recommend Wiring

	AC Input T.B	DC Output T.B	Signal connector
Solid Wire	6mm^2 max.	6mm^2 max.	1.5mm^2 max.
A.W.G	18~10 AWG	18~8 AWG	24~16 AWG
Wire Stripping Length	10~11mm	10~11mm	8~9mm
Screw Terminal Torque	5 Lb-In	5 Lb-In	/

■ Installation Instruction

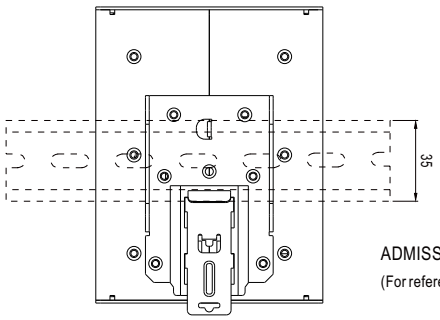

ADMISSIBLE DIN-RAIL:TS35/7.5 OR TS35/15
(For reference only. Not included with unit.)

This series fits DIN rail TS35/7.5 or TS35/15.
For installation details, please refer to the Instruction manual.

■ Packing

Standard Packing	Q'TY/Box (PCS)	One Box G.W.	Total Q'TY/ Carton(PCS)	One Carton G.W.
Unit : mm 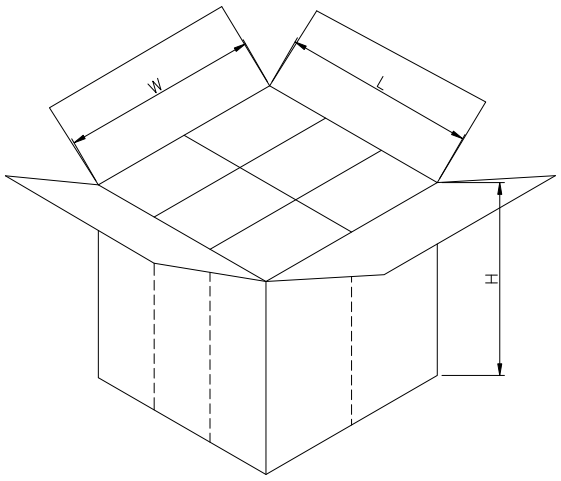 CARTON L448 x W408 x H228	1	1.93Kg	6	12.55Kg

■ Installation Manual

Please refer to : http://www.meanwell.com/manual.html