400W Single Output with PFC Function

UDP-400 series

User's Manual
Scan or Click



Features

- Universal AC input / Full range
- Withstand 300VAC surge input for 5 seconds
- Low profile: 26mm
- High efficiency up to 92%
- Built-in active PFC function
- Fanless design, cooling by free air convection
- Protections: Short circuit / Overload / Over voltage / Over temperature
- Output voltage adjustable: DIP switch
- Redundant function(R Type)
- Operating altitude up to 5000 meters(Note 9)
- Conformal coating
- LED indicator for power on
- 3 years warranty

Applications

- LED signage display
- Moving sign
- LED channel letter
- LED TV wall

GTIN CODE

MW Search: https://www.meanwell.com/serviceGTIN.aspx

Description

The UDP-400 series is a 400W LED display power solution. The ultra-low-profile design allows the sign module to be slim in height and weight. It greatly simplifies the delivery and installation processes. Thanks to its high efficiency and energy-saving performance, the series delivers effective energy savings. It is suitable for LED signage displays, moving signs, LED channel letters, LED TV walls, etc.

Model Encoding

UDP - 400 □ - 5

- 5: Rated output voltage(4.2/4.6/5V)
- □: Blank: For standard version; R: Built-in redundant function
- 400: Rated wattage
- UDP: Series name

Type	Description	Note
Blank	For standard version	In Stock
R	Built-in redundant function.	In Stock

SPECIFICATION	UDP-400□-4.2	UDP-400□-4.6	UDP-400□-5
OUTPUT			
DC VOLTAGE	4.2V	4.6V	5V
RATED CURRENT	80A	80A	80A
CURRENT RANGE	0~80A	0~80A	0~80A
RATED POWER	336W	368W	400W
RIPPLE & NOISE(max.) Note.2	200mVp-p	200mVp-p	200mVp-p
VOLTAGE ADJ.RANGE	3.8~4.2V	4.2~4.6V	4.6~5.0V
VOLTAGE TOLERANCE Note.3	±2.0%	±2.0%	±2.0%
LINE REGULATION	±0.5%	±0.5%	±0.5%
LOAD REGULATION	±1.0%	±1.0%	±1.0%
SETUP, RISE TIME	1000ms, 100ms/230VAC, 1500ms, 100ms/115VAC		
HOLD UP TIME (Typ.)	10ms/230VAC 10ms/115VAC		
INTPUT			
VOLTAGE RANGE Note.4	90 ~ 264VAC 127 ~ 370VDC		
FREQUENCY RANGE	47 ~ 63Hz		
POWER FACTOR (Typ.)	PF≥0.97/115VAC PF≥0.95/230VAC at full load		
EFFICIENCY (Typ.) Note.7	90.5%	91%	92%
AC CURRENT (Typ.)	4.8A/115VAC 2.4A/230VAC		
INRUSH CURRENT (Typ.)	Cold start : 30A/115VAC 60A/230VAC		
LEAKAGE CURRENT	<1.0mA / 240VAC		
PROTECTION			
OVERLOAD	105~180% rated output power		
	Protection type : Hiccup mode, recovers automatically after fault condition is removed		
SHORT CIRCUIT	Protection type : Hiccup mode, recovers automatically after fault condition is removed		
OVER VOLTAGE	4.6 ~ 6.3V	5 ~ 6.7V	5.6 ~ 7.5V
	Protection type : Hiccup mode, recovers automatically after fault condition is removed		
OVER TEMPERATURE	Protection type : Hiccup mode, recovers automatically after fault condition is removed		
FUNCTION			
REDUNDANT(Optional)	For parallel connection protection: For parallel applications, when one PSU cannot work, the other one will be automatically enabled. This prevents system crash and enhances system reliability.		
ENVIRONMENT			
WORKING TEMP.	-40 ~ +70℃ (Refer to "OUTPUT LOAD vs TEMPERATURE")		
WORKING HUMIDITY	20 ~ 95% RH non-condensing		
STORAGE TEMP., HUMIDITY	-40 ~ +85℃, 10 ~ 95% RH		
TEMP. COEFFICIENT	±0.03%/℃ (0 ~ 50℃)		
VIBRATION	10 ~ 500Hz, 2G 10min./1cycle, 60min. each along X, Y, Z axes		

SAFETY & EMC			
SAFETY STANDARDS	UL 62368-1, BS EN/EN62368-1,GB 4943.1, EAC TP TC 004 approved		
WITHSTAND VOLTAGE	I/P-O/P:3.0kVAC I/P-FG:2kVAC O/P-FG:0.5kVAC		
ISOLATION RESISTANCE	I/P-O/P, I/P-FG, O/P-FG:100M Ohms/500VDC/25℃/ 70%RH		
EMC EMISSION	**Parameter**	**Standard**	**Test Level / Note**
	Conducted	BS EN/EN55032(CISPR32),GB/T 9254.1	Class B
	Radiated	BS EN/EN55032(CISPR32),GB/T 9254.1	Class B
	Harmonic Current	BS EN/EN61000-3-2(IEC61000-3-2),GB17625.1	Class D
	Voltage Flicker	BS EN/EN61000-3-3(IEC61000-3-3)	-----
EMC IMMUNITY	BS EN/EN55035(CISPR35); BS EN/EN IEC61000-6-2		
	Parameter	**Standard**	**Test Level / Note**
	ESD	BS EN/EN61000-4-2	Level 3, 8kV air ; Level 2, 4kV contact
	Radiated	BS EN/EN61000-4-3	Level 3,10V/m(80M-1GHz) Level 2,3V/m(1.4G-6GHz)
	EFT / Burst	BS EN/EN61000-4-4	Level 3, 2kV
	Surge	BS EN/EN61000-4-5	Level 4, 2kV/Line-Line 4kV/Line-Earth
	Conducted	BS EN/EN61000-4-6	Level 3, 10V
	Magnetic Field	BS EN/EN61000-4-8	Level 4, 30A/m
	Voltage Dips and Interruptions	BS EN/EN61000-4-11	100% dip 1 period, 60% dip 10 periods, 30% dip 25 periods, 100% interruptions 250 periods
OTHERS			
MTBF	1654.6 K hrs min. Telcordia SR-332 (Bellcore) ; 207.2K hrs min. MIL-HDBK-217F (25℃)		
DIMENSION	200*50*26mm (L*W*H)		
PACKING	0.46kg; 30pcs/ 14.8kg/0.66CUFT		

NOTE

1. All parameters NOT specially mentioned are measured at 230VAC input, rated load and 25℃ of ambient temperature.
2. Ripple & noise are measured at 20MHz of bandwidth by using a 12" twisted pair-wire terminated with a 0.1uf & 47uf parallel capacitor.
3. Tolerance : line regulation and load regulation.
4. Derating may be needed under low input voltages. Please check the static characteristics for more details.
5. Length of set up time is measured at cold first start. Turning ON/OFF the power supply may lead to increase of the set up time.
6. Dynamic load testing shall be performed with a minimum load of 10%.
7. R-type efficiency is about 1% less than the Blank type.
8. The power supply is considered a component which will be installed into a final equipment. The final equipment must be re-confirmed that it still meets EMC directives. For guidance on how to perform these EMC tests, please refer to “EMI testing of component power supplies.” (as available on https://www.meanwell.com//Upload/PDF/EMI_statement_en.pdf)
9. The ambient temperature derating of 3.5℃/1000m is needed for operating altitude greater than 2000m(6500ft).

※ Product Liability Disclaimer : For detailed information, please refer to https://www.meanwell.com/serviceDisclaimer.aspx

■ Block Diagram

PFC fosc : 120KHz
PWM fosc : 50~100KHz

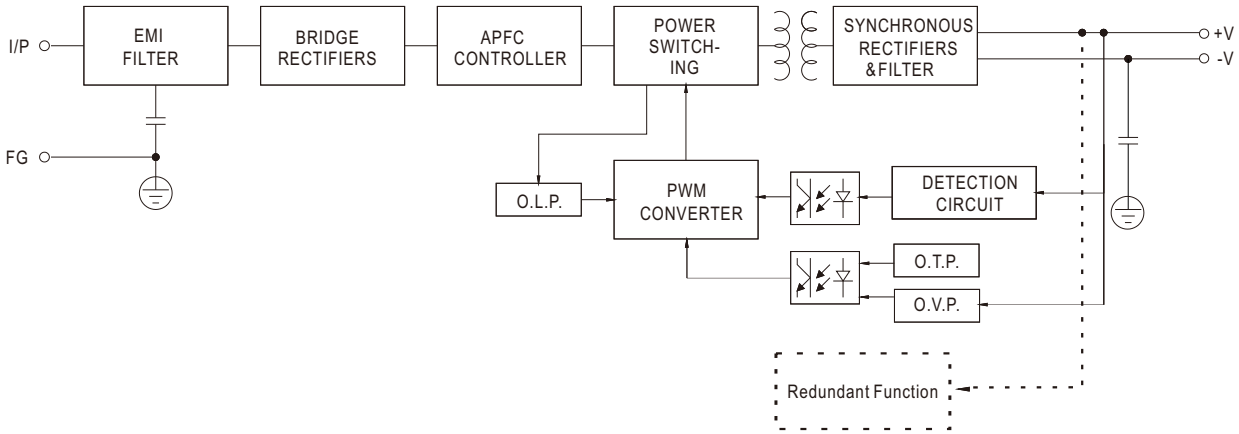

■ OUTPUT LOAD vs TEMPERATURE

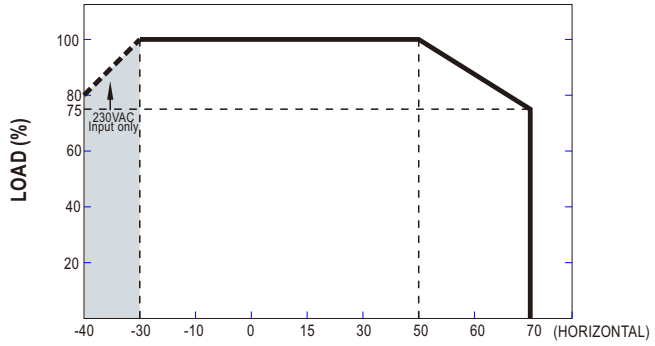

AMBIENT TEMPERATURE,Ta (℃)

Note: Below 110Vac @-30℃ there may be a restart situation within 5 seconds after power-on

■ STATIC CHARACTERISTIC

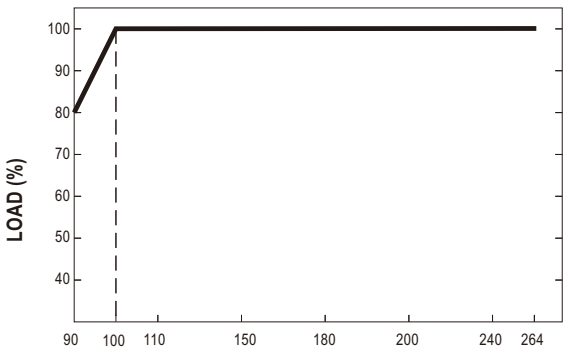

INPUT VOLTAGE (V) 60Hz

■ Mechanical Specification

CASE NO.: 316 Unit:mm Tolerance:±1

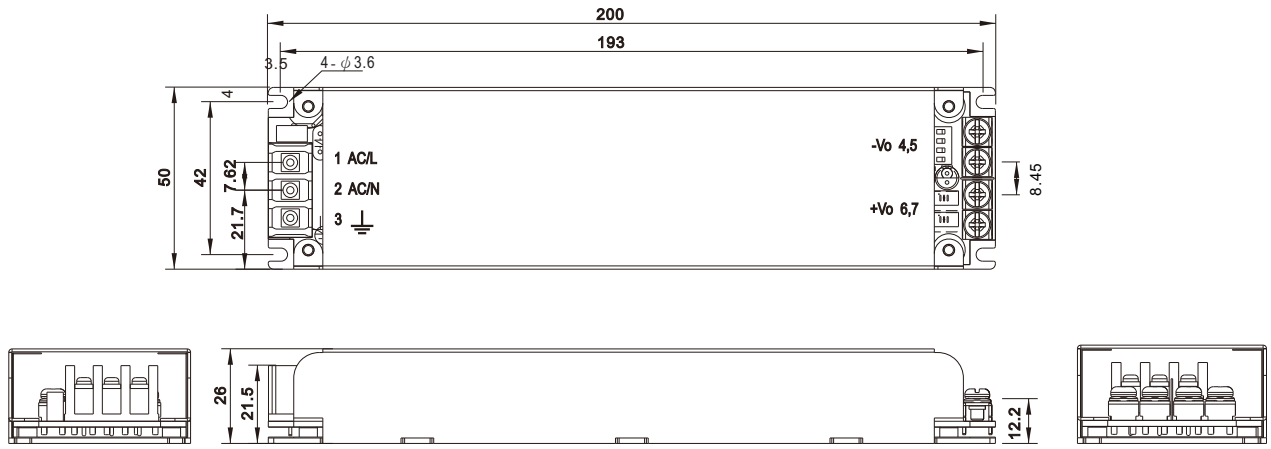

AC Input Terminal(TB1) pin NO. Assignment

Pin No.	Assignment	Terminal	Mounting torque
1	AC/L	(DEGSON) DG28C-B-03P-13	4-5Kgf.cm
2	AC/N		
3	⏚		

DC Output Terminal(TB2,TB3,TB4,TB5) pin NO. Assignment

Pin No.	Assignment	Terminal	Mounting torque
4,5	-Vo	(MW) K14-20A(H)	6-8Kgf.cm
6,7	+Vo		

■ Function manual

1.The output voltoge can be adjusted

DIP Switch Settings	UDP-400-4.2	UDP-400-4.6	UDP-400-5	
1 2 3 4 ON OFF Factory default	4.2V	4.6V	5.0V	Fixed output
1 2 3 4 ON OFF	4.1V	4.5V	4.9V	Fixed output
1 2 3 4 ON OFF	4.0V	4.4V	4.8V	Fixed output
1 2 3 4 ON OFF	3.9V	4.3V	4.7V	Fixed output
1 2 3 4 ON OFF	3.8V	4.2V	4.6V	Fixed output
Other Setting				Incorrect Mode Not recommend

Note: It is recommended to adjust the DIP switch with the power off.

2.Redundant function

(1) UDP-400R is built-in redundant function and can be connected 2 units in parallel .

(2) When in parallel operation the maximum load should not be greater than the rated power of any PSU.

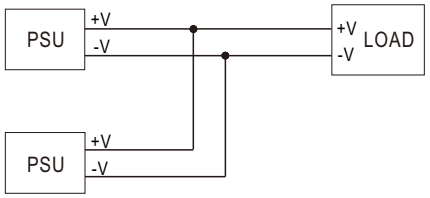

■ Installation

1.Operate with additional aluminum plate

In order to meet the "Derating Curve" and "Static Characteristics", the UDP-400 series must be mounted on an aluminum plate (or cabinet of equivalent dimensions) at its bottom side. The recommended dimensions of the aluminum plate are shown below. To optimize thermal performance, the aluminum plate shall feature a flat, smooth surface(or be applied with thermal grease), and the UDP-400 series must be firmly mounted at the center of this aluminum plate.

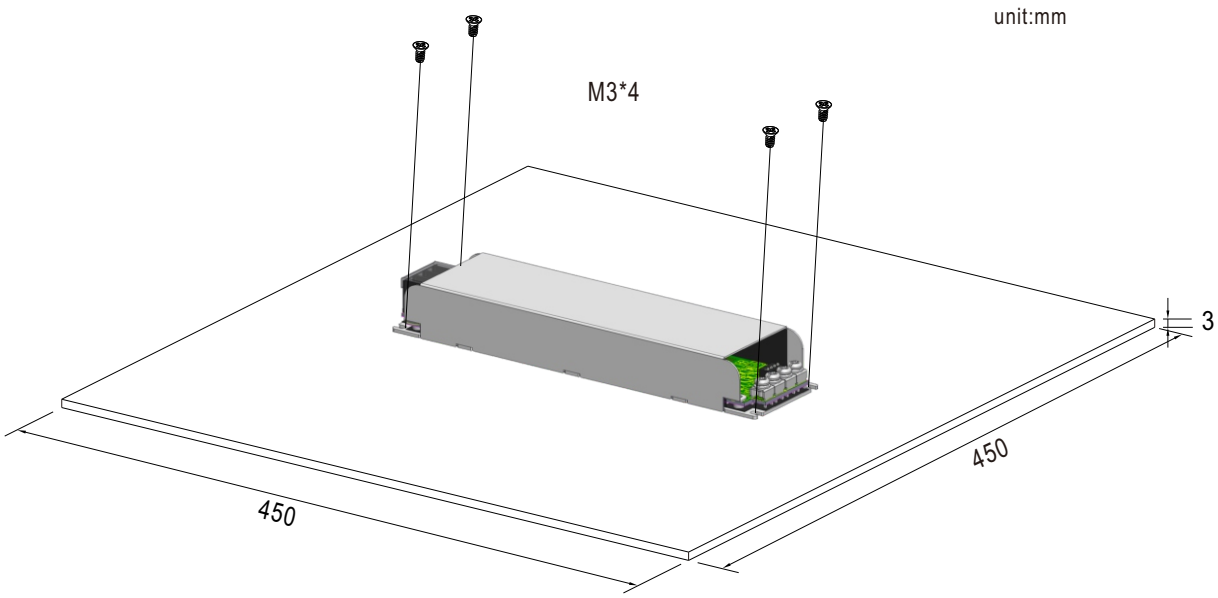

■ Packing

Standard Packing	Q'TY/Box (PCS)	One Box G.W.	Total Q'TY/ Carton (PCS)	One Carton G.W.
Unit : mm 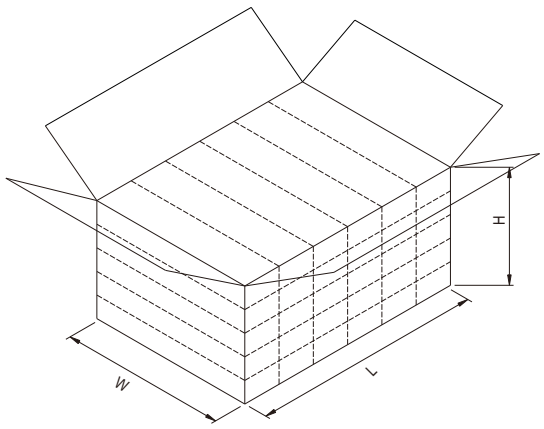 CARTON L354xW278xH190	1	0.48kg	30	14.8kg